The Right Connection™

Dixon Sanitary

featuring

Bradford™ Products

2013 Fittings Catalog

bradfordfittings.com • *Customer Service:* **800.789.1718**

Dixon Sanitary 2013 Catalog

DS2013

QUALITY • SERVICE • MANUFACTURING • QUALITY • SERVICE • MANUFACTURING • QUALITY • SERVICE • MANUFACTURING • QUALITY • SERVICE • MANUFACTUR

Clamp Fittings

A p. 7

Pipe Fittings

B p. 32

I-Line & Q-Line

E p. 54

Polished Fittings

F p. 64

Bio-Pharmaceutical Fittings (BPE)

I p. 86

Tubing & Wall Flanges

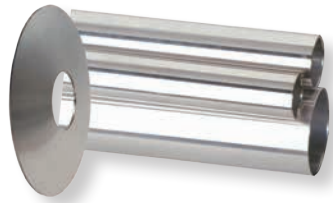

J p. 101

Sight Glasses

M p. 110

Filters / Strainers

N p. 111

Swivels

Q p. 140

Cam & Groove

R p. 142

High Pressure Quick Disconnects

U p. 171

Ball Valves

V p. 180

Sample Valves

Y p. 223

Technical

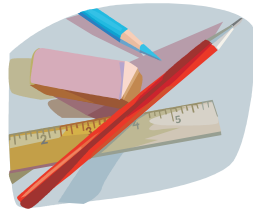

Z p. 230

Bevel Seat

C p. 38

John Perry

D p. 49

Unpolished Fittings

G p. 74

European Fittings

H p. 81

Tube Hangers

K p. 104

Custom Fabrications

L p. 109

Instrumentation

O p. 118

Cleaning, Washdown & Maintenance

P p. 134

Hose Fittings

S p. 153

Air Fittings

T p. 162

Butterfly Valves

W p. 197

Check Valves

X p. 214

A Clamp Fittings
B Pipe Fittings
C Bevel Seat
D John Perry
E I-Line & Q-Line
F Polished Fittings
G Unpolished Fittings
H European Fittings
I BPE Fittings
J Tubing & Wall Flanges
K Tube Hangers
L Custom Fabrications
M Sight Glasses
N Filters/ Strainers
O Instrumentation
P Cleaning, Washdown & Maintenance
Q Swivels
R Cam & Groove
S Hose Fittings
T Air Fittings
U High Pressure Quick Disconnects
V Ball Valves
W Butterfly Valves
X Check Valves
Y Sample Valves
Z Technical

Dixon Sanitary Quality: maintaining the 3A standards

3A Certs

Scan me with your Smart Phone.
No reader?
Download a free QR-Code 2D barcode reader.
http://www.mobile-barcodes.com/qr-code-software/

3-A Sanitary Standards, Inc. (3-A SSI) is a non-profit association representing equipment manufacturers, processors, regulatory sanitarians and other public health professionals. Through many decades of cooperation, these groups have established a comprehensive inventory of 3-A Sanitary Standards and 3-A Accepted Practices now known around the world for dairy and food processing equipment and systems.

Dixon Sanitary has earned its 3A symbols through the 3A Third Party Verification (TPV) program, requiring a professional assessment rather than voluntary compliance, making certain each product conforms in all respects to the published standards. The 3A Standards are accepted by USDA and FDA.

Dixon Sanitary holds the following 3A certification:

- Bradford™ Sanitary Fittings including BPE meet 3A Sanitary Standards for Sanitary Fittings, Number 63-03 (Authorization number 621).
- Bradford™ Check Valves meet 3A Sanitary Standards for Vacuum Breakers and Check Valves, Number 58-00 (Authorization number 1447).
- Bradford™ Pumps meet 3A Sanitary Standards for Centrifugal Pumps, Number 02-10 (Authorization number 1537).
- Bradford™ Filter/Strainers meet 3A Sanitary Standards for Filters Using Single Service Media, Number 10-04 (Authorization number 1446).
- Bradford™ Seat Valves meet 3A Sanitary Standards for Compression - Type Valves, Number 53-06 (Authorization number 1655)

We carry 3A material from other suppliers who have also earned their 3A authorizations through the TPV Program:

- United (Authorization 331) Metal Tubing meets 3A Sanitary Standards for Metal Tubing, Number 33-02.
- CSE (Authorization 850) Gauges meet 3A Sanitary Standards for Sensors and Sensor Fittings and Connections, Number 74-03.

Visit the Dixon Sanitary website bradfordfittings.com to download certificates in PDF format or call Dixon Sanitary at 800.789.1718.

All dimensions are in inches unless otherwise noted. Engineering dimensions are available upon request.
Specifications are subject to change without notice.

Butterfly Valves

NEW FOR 2013

B5115 - 304 Butterfly Valve
page: 210

Instrumentation

Gauge part numbers for 1½" and 2" gauges, PSI ratings from 0-30, 0-60, 0-100, 0-160, 0-200 and 0-300 in both back and bottom mount configurations.
pages: 118 - 133

Bio-Pharmaceutical Fittings (BPE)

pages: 86 - 100

Hose Fittings

expansion plug

flow chief ferrules

clamp end stem

tube weld stem

pages: 153 - 161

NEW FOR 2013

Air Fittings

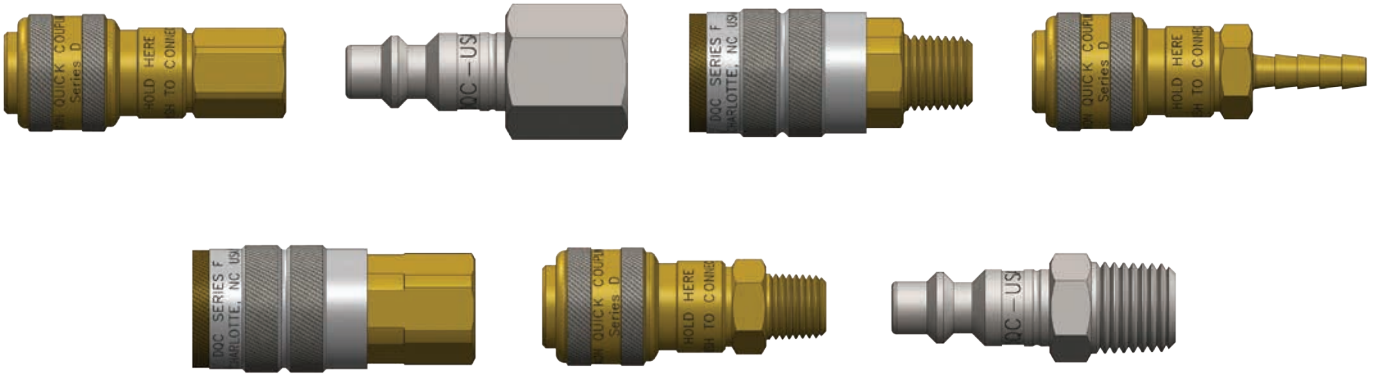

DF-Series Pneumatic Couplings
page: 162 - 170

Posters

FITTINGS

BIOPHARM

To order the full color **26.5" x 34"** poster or download and print an **11" x 17"** poster, visit our website: bradfordfittings.com

Introducing the Bradford™ SV-Series single seat valve!

The Bradford SV-series single seat valves offer a true hygienic design to meet your most demanding process applications. The SV-series valves are offered in 316L stainless steel with a variety of body configurations and seat and stem seal materials to fit your specific needs. This valve series is designed to shut off or divert the flow in your process either remotely by using air or locally using a manual operating device. The rugged design of the actuator and valve body allow the valve to stand up to decades of the harsh environments often found in the sanitary industry. All styles are available in 1" to 3" sizes.

Actuation

Valves

Pump

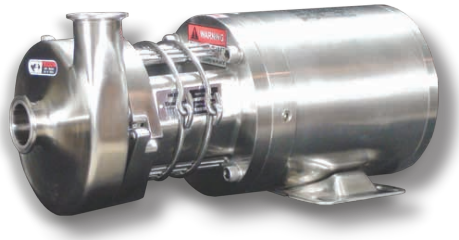

go to *bradfordfittings.com* to download
the Engineered Products Catalog
phone: 800.789.1718
fax: 800.789.4046

for "How to" videos go to

Scan me with your Smart Phone.
No reader?
Download a free QR-Code 2D barcode reader.
http://www.mobile-barcodes.com/qr-code-software/

Bradford™ High Purity Bio-Pharm Line

DV-Series Diaphragm Valves

Innovative Design

Optimized internal cleaning because of Circumferential Defined Sealing Angle (CDSA-Design) between the process diaphragm and valve body.

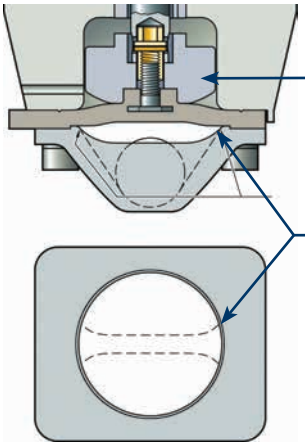

- product entrapment reduced or eliminated on the body bonnet flange
- better sealing performance and evenly distributed closing force
- diaphragm lifetime is extended

Bodies

- 316L – manufactured to ASME BPE Table DT-3
- full material traceability standard
- standard 316L bodies are forged or machined
- cast bodies are available when acceptable

Bonnets

- manual and actuated
- three different styles
  - manual hand wheel
  - piston actuator
  - diaphragm actuator
- available in:
  - stainless steel
  - thermoplastic
  - combination of both

Diaphragms

- EPDM
- modified PTFE (TFM)/EPDM
- all diaphragms are FDA Compliant and conform to USP Class VI

Fittings

- clamp and weld fittings
- sizes: ½" to 6"
- all dimensions and markings are to the current ASME BPE specifications
- all product is stocked SF1 and SF4 finishes
- sulfur content is controlled per the current ASME BPE specifications
- The packaging is to specification and proper certification is included with every part.

go to *bradfordfittings.com* to download
the High Purity BioPharm Catalog
phone: 800.789.1718
fax: 800.789.4046

Bradford™ Clamp Fittings

63-03
621

A Complete Clamping Connection

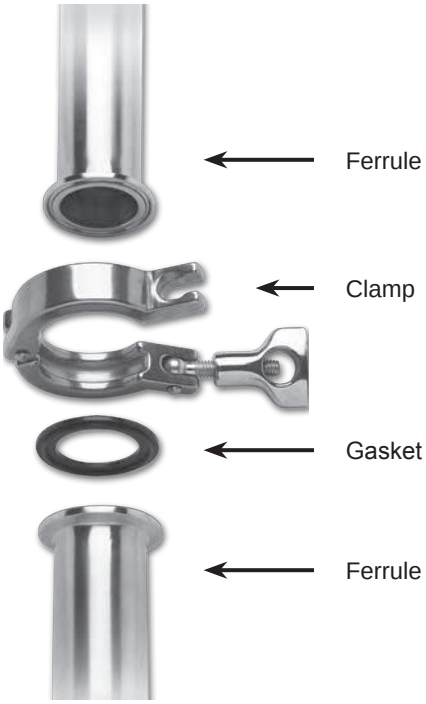

Product Specifications

Size range:
- ½" - 12" OD tube

Materials:
- G = 304 stainless steel
- R = 316L stainless steel
- other alloys are available

Finish:
- 3A sanitary finish ID and OD
- other finishes are available

Dimensions of stainless steel tube given in inches

Tube OD	Nominal Wall Thickness	Gage Number
½"	.065	16
¾"	.065	16
1"	.065	16
1½"	.065	16
2"	.065	16
2½"	.065	16
3"	.065	16
4"	.083	14
5"	.109	12
6"	.109	12
8"	.120	10
10"	.109	12
12"	.120	10

This section contains tube OD materials. Please note in sizes ½" through 12" the pipe is known by its nominal inside diameter, which differs from its actual inside diameter. To distinguish pipe sizes from actual measured diameters as used for tube, the terms *iron pipe size* (IPS) or *nominal pipe size* (NPS) are usually used. For all pipe sizes, the outside diameter (OD) remains constant; the variations in wall thickness affect the inside diameter (ID).

Pipe size and Tube OD size materials are not interchangeable

Index

Clamps and Accessories 8-10
Ferrules 11-12
Caps 13
Adapters 14-17
Elbows 18-19
Tees 20
Reducers 21-22
Miscellaneous 22-23
Gaskets 24-31
APC Clamp Gaskets 31

Clamps

Service pressure ratings are based on the following parameters: matching elastomer gaskets and weld ferrules properly aligned and assembled with the clamps tightened to the required torques. Tests are done hydrostatically with no water hammer or shock loads. Please note the pressure ratings of the described unions may be above the recommended pipe line operating pressures.

Single Pin Squeeze Clamps - *13MHHM-Q*

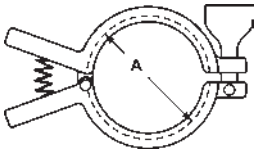

Tube OD	Service Pressure Rating @ 70°F [1]	Service Pressure Rating @ 250°F [1]	A	Part Number
½" - ¾"	1500	1200	1.062	***13MHHM-Q75***
1" - 1½"	500	300	2.122	***13MHHM-Q100150***
2"	450	250	2.654	***13MHHM-Q200***
2½"	400	200	3.185	***13MHHM-Q250***
3"	350	175	3.717	***13MHHM-Q300***
4"	300	150	4.820	***13MHHM-Q400***

[1] wing nut tightened to 25 in. lb. of torque

Tale of Two Clamps video
Scan me with your Smart Phone. No reader? Download a free QR-Code 2D barcode reader. http://www.mobile-barcodes.com/qr-code-software/

Single Pin Heavy Duty Clamps with Cross Hole Wing Nut - *13MHHM*

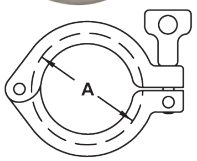

Tube OD	Service Pressure Rating @ 70°F [1]	Service Pressure Rating @ 250°F [1]	A	Part Number
½" - ¾"	1500	1200	1.062	***13MHHM50-75***
1" - 1½"	500	300	2.122	***13MHHM100-150***
2"	450	250	2.654	***13MHHM200***
2½"	400	200	3.185	***13MHHM250***
3"	350	175	3.717	***13MHHM300***
4"	300	150	4.820	***13MHHM400***
5"	225	100	5.820	***13MHHM500***
6"	150	75	6.695	***13MHHM600***
8"	100	50	8.695	***13MHHM800***

[1] wing nut tightened to 25 in. lb. of torque

Single Pin Heavy Duty Clamps with Serrated Wing Nut - *13MHHM***SN*

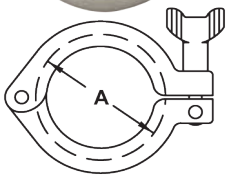

Tube OD	Service Pressure Rating @ 70°F [1]	Service Pressure Rating @ 250°F [1]	A	Part Number
½" - ¾"	1500	1200	1.062	***13MHHM50-75SN***
1" - 1½"	500	300	2.122	***13MHHM100-150SN***
2"	450	250	2.654	***13MHHM200SN***
2½"	400	200	3.185	***13MHHM250SN***
3"	350	175	3.717	***13MHHM300SN***
4"	300	150	4.820	***13MHHM400SN***
5"	225	100	5.820	***13MHHM500SN***
6"	150	75	6.695	***13MHHM600SN***
8"	100	50	8.695	***13MHHM800SN***

[1] wing nut tightened to 25 in. lb. of torque

Double Pin Heavy Duty Clamps - *13MHHM-DP*

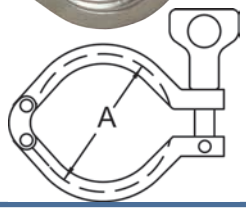

Tube OD	Service Pressure Rating @ 70°F [1]	Service Pressure Rating @ 250°F [1]	A	Part Number
1" - 1½"	500	300	2.122	***13MHHM-DP100150***
2"	450	250	2.654	***13MHHM-DP200***
2½"	400	200	3.185	***13MHHM-DP250***
3"	350	175	3.717	***13MHHM-DP300***
4"	300	150	4.820	***13MHHM-DP400***
10"	100	50	10.740	***13MHHM-DP1000***

[1] wing nut tightened to 25 in. lb. of torque

Clamps

Three Segment Clamps - *13MHHM-3P*

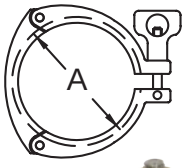

Tube OD	Service Pressure Rating @ 70°F [1]	Service Pressure Rating @ 250°F [1]	A	Part Number
1" - 1½"	600	300	2.122	***13MHHM-3P100150***
2"	550	275	2.654	***13MHHM-3P200***
2½"	450	225	3.185	***13MHHM-3P250***
3"	350	175	3.717	***13MHHM-3P300***
4"	300	150	4.820	***13MHHM-3P400***
12"	75	50	12.740	***13MHHM-3P1200***

[1] wing nut tightened to 25 in. lb. of torque

Bolted Clamps - *13MHP*

½" - ¾"

1" - 12"

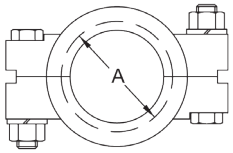

Tube OD	Service Pressure Rating @ 70°F [1]	Service Pressure Rating @ 250°F [1]	A	Part Number
½" - ¾"	1500	1200	1.062	***13MHP75***
1" - 1½"	1500	1200	2.046	***13MHP100-150***
2"	1000	800	2.578	***13MHP200***
2½"	1000	800	3.110	***13MHP250***
3"	1000	800	3.640	***13MHP300***
4"	800	600	4.744	***13MHP400***
6"	300	200	6.632	***13MHP600***
8"	250	150	8.638	***13MHP800***
10"	200	125	10.740	***13MHP1000***
12"	150	100	12.740	***13MHP1200***

[1] all nuts are tightened to 20 ft. lb. of torque

Toggle Clamps - *13MHLA*

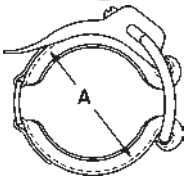

Tube OD	Service Pressure Rating @ 70°F [1]	Service Pressure Rating @ 250°F [1]	A	*304 Stainless Steel* Part Number
1" - 1½"	150	125	2.122	***13MHLA100-150***
2"	150	125	2.654	***13MHLA200***
2½"	150	125	3.185	***13MHLA250***
3"	150	125	3.717	***13MHLA300***
4"	100	75	4.820	***13MHLA400***

[1] screw tightened to maximum

T-bolt Clamps - *13MO*

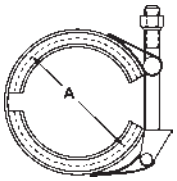

Tube OD	Service Pressure Rating @ 70°F [1]	Service Pressure Rating @ 250°F [1]	A	*304 Stainless Steel* Part Number
1" - 1½"	500	250	2.080	***13MO100-150***
2"	350	200	2.610	***13MO200***
2½"	300	150	3.140	***13MO250***
3"	200	100	3.670	***13MO300***
4"	100	75	4.780	***13MO400***
6"	75	50	6.690	***13MO600***
8" *	50	40	8.690	***13MO800***
10" *	40	30	10.690	***13MO1000***
12" *	30	25	12.690	***13MO1200***

[1] 1" - 3" nuts tightened to 20 in. lb., 4" to 30 in. lb., 6" to 40 in. lb. and 8" - 12" 50 in. lb. of torque.
* 2 bolt configuration

Clamps

Dairy Clamps - *13WGC*

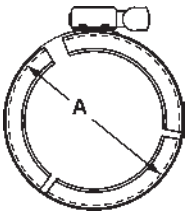

Tube OD	Service Pressure Rating @ 70°F [1]	Service Pressure Rating @ 250°F [1]	A	*304 Stainless Steel* Part Number
1" - 1½"	100	75	2.080	***13WGC100-150***
2"	100	75	2.610	***13WGC200***
2½"	100	75	3.140	***13WGC250***
3"	100	75	3.670	***13WGC300***
4"	100	75	4.780	***13WGC400***

[1] finger tight

Spring Loaded Nut - *13SLN*

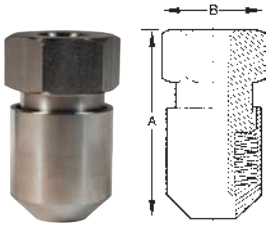

Features:
- Lines using PTFE gaskets that are subject to large temperature swings can benefit from this special product. As the PTFE is compressed through the cycling of the lines, the spring load will help keep the connection from leaking.
- If the lines suffer from vibration and bolted clamps are not an option, refitting single pin clamps with this nut will keep the connections from leaking for a longer time than the standard wing nuts.
- If you transport material in tanks via truck, the vibrations can loosen the standard single pin clamps. Spring loaded nuts can add a level of insurance to the shipment.
- *Note:* can be used on all wing nut style clamps
- torque to 50 in. lb.

Thread	A	B	*304 Stainless Steel* Part Number
5/16 - 18	1.73	.875	***13SLN***

Torque-Rite® Nuts - *13TR*

Features:
- an audible "*click*" indicates correct inch/pounds force
- maintains constant 30 or 50 inch/pounds force
- manual override feature
- retrofits all sanitary clamps, ¾" through 12"
- works in rupture disk applications
- no torque wrench or special training required

Description	Part Number
Torque-Rite® 30 in. lb nut	***13TR-30***
Torque-Rite® 50 in. lb nut	***13TR-50***

Accessories

Description	Part Number
Cross hole wing nut 5/16"-18	***13WNX***
Mini cross hole wing nut 5/16"-18 for ½" - ¾" clamps	***13WNXM***
Serrated wing nut 5/16"-18	***13WNS***
Hex wing nut 5/16"-18	***13WNH***
Bronze hex nut 3/8"-16 for bolted clamps	***13BN***
Brass 3/8-16 nuts used on ½" - ¾" and 10" & 12" bolted clamps	***13BHN***
Stainless steel hex nut for bolted clamps	***13SN***
3/8" 304 stainless steel lock washer	***13LW***
Bolt 3/8"-16 x 2¼" for ½ - 1½" bolted clamps	***13CB-2.25***
Bolt 3/8"-16 x 2¾" for 2" and 2½" bolted clamps	***13CB-2.75***
Bolt 3/8"-16 x 3¼" for 3" - 12" bolted clamps	***13CB-3.25***
Rivet pin for ½" - 5" single pin clamps 5/16" x 1"	***13RP***
Rivet pin for 6" and 8" single pin clamps 5/16" x 1-1/8"	***13RP6***
5/16"-18 x 2" threaded eye bolt for ½" - 5" clamps	***13IB***
5/16"-18 x 2½" threaded eye bolt for 6" - 12" clamps	***13IB6***

Clamp Ferrules

Short Weld Ferrules - *14WMP*

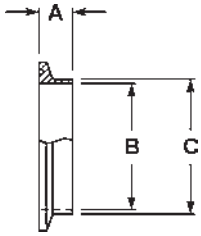

Tube OD	A	B	C	*304 Stainless Steel* Part Number	*316L Stainless Steel* Part Number
½"	.500	.370	.500	***14WMP-G50***	***14WMP-R50***
¾"	.500	.620	.750	***14WMP-G75***	***14WMP-R75***
1"	.500	.870	1.000	***14WMP-G100***	***14WMP-R100***
1½"	.500	1.370	1.500	***14WMP-G150***	***14WMP-R150***
2"	.500	1.870	2.000	***14WMP-G200***	***14WMP-R200***
2½"	.500	2.370	2.500	***14WMP-G250***	***14WMP-R250***
3"	.500	2.870	3.000	***14WMP-G300***	***14WMP-R300***
4"	.625	3.834	4.000	***14WMP-G400***	***14WMP-R400***
5"	.750	4.782	5.000	***14WMP-G500***	***14WMP-R500***
6"	.875	5.782	6.000	***14WMP-G600***	***14WMP-R600***
8"	.875	7.760	8.000	***14WMP-G800***	***14WMP-R800***
10"	.875	9.782	10.000	***14WMP-G1000***	***14WMP-R1000***
12"	.875	11.760	12.000	***14WMP-G1200***	***14WMP-R1200***

Long Weld Ferrules - *L14AM7*

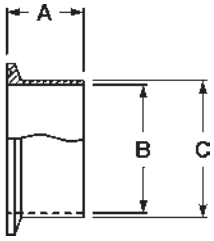

Tube OD	A	B	C	*304 Stainless Steel* Part Number	*316L Stainless Steel* Part Number
½"	1.125	.370	.500	***L14AM7-G50***	***L14AM7-R50***
¾"	1.125	.620	.750	***L14AM7-G75***	***L14AM7-R75***
1"	1.125	.870	1.000	***L14AM7-G100***	***L14AM7-R100***
1½"	1.125	1.370	1.500	***L14AM7-G150***	***L14AM7-R150***
2"	1.125	1.870	2.000	***L14AM7-G200***	***L14AM7-R200***
2½"	1.125	2.370	2.500	***L14AM7-G250***	***L14AM7-R250***
3"	1.125	2.870	3.000	***L14AM7-G300***	***L14AM7-R300***
4"	1.125	3.834	4.000	***L14AM7-G400***	***L14AM7-R400***
5"	1.125	4.782	5.000	***L14AM7-G500***	***L14AM7-R500***
6"	1.500	5.782	6.000	***L14AM7-G600***	***L14AM7-R600***
8"	1.500	7.760	8.000	***L14AM7-G800***	***L14AM7-R800***
10"	1.750	9.782	10.000	***L14AM7-G1000***	***L14AM7-R1000***
12"	1.750	11.760	12.000	***L14AM7-G1200***	***L14AM7-R1200***

Reducing Roll-on Ferrules for Expanding - *B31RMP*

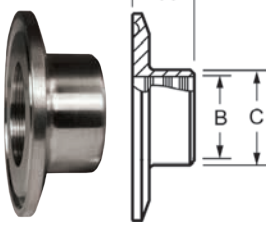

Clamp End	Tube OD	A	B	C	*304 Stainless Steel* Part Number
1½"	1"	.750	1.007	1.160	***B31RMP-G150100***
2"	1"	.750	1.007	1.160	***B31RMP-G200100***
2"	1½"	1.125	1.507	1.676	***B31RMP-G200150***

* for use when modifying or repairing existing on-site farm milk handling systems

Reducing Ferrules - *B31WMP*

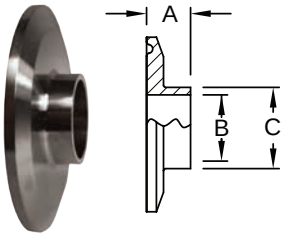

Tube OD	A	B	C	*304 Stainless Steel* Part Number	*316L Stainless Steel* Part Number
2" x 1"	.500	.870	1.000	***B31WMP-G200100***	***B31WMP-R200100***
2½" x 1½"	.500	1.370	1.500	***B31WMP-G250150***	***B31WMP-R250150***
2½" x 2"	.500	1.870	2.000	***B31WMP-G250200***	***B31WMP-R250200***
3" x 2"	.500	1.870	2.000	***B31WMP-G300200***	***B31WMP-R300200***
3" x 2½"	.500	2.370	2.500	***B31WMP-G300250***	***B31WMP-R300250***
4" x 3"	.625	2.870	3.000	***B31WMP-G400300***	***B31WMP-R400300***

Clamp Ferrules

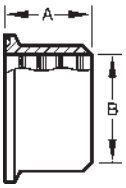

Roll-On Ferrules for Expanding - *14RMP*

Tube OD	A	B	*304 Stainless Steel* Part Number	*316L Stainless Steel* Part Number
1"	.750	1.005	***14RMP-G100***	***14RMP-R100***
1½"	1.125	1.505	***14RMP-G150***	***14RMP-R150***
2"	1.312	2.005	***14RMP-G200***	***14RMP-R200***
2½"	1.375	2.505	***14RMP-G250***	***14RMP-R250***
3"	1.437	3.005	***14RMP-G300***	***14RMP-R300***
4"	1.500	4.005	***14RMP-G400***	***14RMP-R400***
6"	2.000	6.005	***14RMP-G600***	*---*

* for use when modifying or repairing existing on-site farm milk handling systems

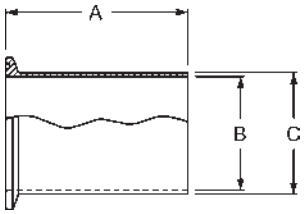

Automatic Weld Ferrules - *TL14AM7*

Specification:
- meets ASME BPE-2012 specifications

Tube OD	A	B	C	*316L Stainless Steel* Part Number
½"	1.750	.370	.500	***TL14AM7-050PL***
¾"	1.750	.620	.750	***TL14AM7-075PL***
1"	1.750	.870	1.000	***TL14AM7-100PL***
1½"	1.750	1.370	1.500	***TL14AM7-150PL***
2"	2.250	1.870	2.000	***TL14AM7-200PL***
2½"	2.250	2.370	2.500	***TL14AM7-250PL***
3"	2.250	2.870	3.000	***TL14AM7-300PL***
4"	2.250	3.834	4.000	***TL14AM7-400PL***
6"	3.000	5.782	6.000	***TL14AM7-600PL***

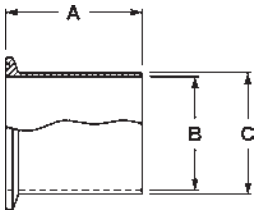

Tank Ferrules (light duty) - *14WLMP*

Tube OD	A	B	C	*304 Stainless Steel* Part Number	*316L Stainless Steel* Part Number
1"	3.000	.870	1.000	***14WLMP-G100***	***14WLMP-R100***
1½"	3.000	1.370	1.500	***14WLMP-G150***	***14WLMP-R150***
2"	3.000	1.870	2.000	***14WLMP-G200***	***14WLMP-R200***
2½"	3.000	2.370	2.500	***14WLMP-G250***	***14WLMP-R250***
3"	4.000	2.870	3.000	***14WLMP-G300***	***14WLMP-R300***
4"	4.000	3.834	4.000	***14WLMP-G400***	***14WLMP-R400***
6"	6.000	5.782	6.000	***14WLMP-G600***	***14WLMP-R600***
8"	6.000	7.760	8.000	*---*	***14WLMP-R800***
10"	6.000	9.782	10.000	*---*	***14WLMP-R1000***
12"	6.000	11.760	12.000	*---*	***14WLMP-R1200***

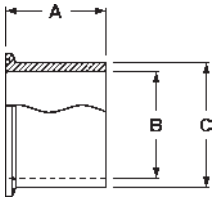

Tank Ferrules (heavy duty) - *14MPW*

Specification:
- certified ASME materials

Tube OD	A	B	C	*316L Stainless Steel* Part Number
½"	1.625	.321	.502	***14MPW-R50***
¾"	1.625	.574	.750	***14MPW-R75***
1"	1.625	.870	1.160	***14MPW-R100***
1½"	1.625	1.370	1.676	***14MPW-R150***
2"	1.750	1.870	2.192	***14MPW-R200***
2½"	1.750	2.370	2.708	***14MPW-R250***
3"	1.813	2.870	3.224	***14MPW-R300***
4"	2.125	3.834	4.256	***14MPW-R400***
6"	2.500	5.758	6.192	***14MPW-R600***
8"	2.500	7.758	8.192	***14MPW-R800***

Clamp Caps

Solid End Caps - *16AMP*

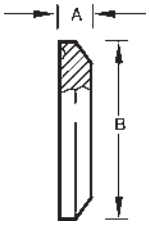

Tube OD	A	B	*304 Stainless Steel* Part Number	*316L Stainless Steel* Part Number
½" - ¾"	.187	.992	***16AMP-G50-75***	***16AMP-R50-75***
1" - 1½"	.250	1.984	***16AMP-G100-150***	***16AMP-R100-150***
2"	.250	2.516	***16AMP-G200***	***16AMP-R200***
2½"	.250	3.047	***16AMP-G250***	***16AMP-R250***
3"	.250	3.579	***16AMP-G300***	***16AMP-R300***
4"	.312	4.682	***16AMP-G400***	***16AMP-R400***
5"	.312	5.687	***16AMP-G500***	***16AMP-R500***
6"	.437	6.570	***16AMP-G600***	***16AMP-R600***
8"	.437	8.570	***16AMP-G800***	***16AMP-R800***
10"	.437	10.570	***16AMP-G1000***	***16AMP-R1000***
12"	.437	12.570	***16AMP-G1200***	***16AMP-R1200***

* Specify if you are using a piping system or a tubing system when ordering.

Thermometer Caps - *B23BMP*

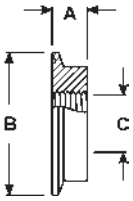

Tube OD	A	B	C [1]	*304 Stainless Steel* Part Number	*316L Stainless Steel* Part Number
½"	.500	.993	¼ NPT	---	***B23BMP-R5014***
¾"	.500	.993	¼ NPT	---	***B23BMP-R7514***
1"	.625	1.984	½ NPT	***B23BMP-G100***	***B23BMP-R100***
1½"	.625	1.984	¾ NPT	***B23BMP-G150***	***B23BMP-R150***
2"	.625	2.516	¾ NPT	***B23BMP-G200***	***B23BMP-R200***
2½"	.625	3.047	¾ NPT	***B23BMP-G250***	***B23BMP-R250***
3"	.625	3.579	¾ NPT	***B23BMP-G300***	***B23BMP-R300***
4"	.625	4.682	¾ NPT	***B23BMP-G400***	***B23BMP-R400***

[1] other NPT tap sizes available, call Dixon Sanitary

Clamp Adapters

Clamp x Plain Bevel Seat Adapters with Hex Nut - *17MP-14*

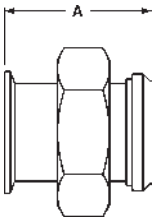

Tube OD	A	*304 Stainless Steel* Part Number
1"	3.000	***17MP-14-G100***
1½"	3.000	***17MP-14-G150***
2"	3.000	***17MP-14-G200***
2½"	3.500	***17MP-14-G250***
3"	3.750	***17MP-14-G300***
4"	4.000	***17MP-14-G400***

Clamp x Threaded Bevel Seat Adapters - *17MP-15*

Tube OD	A	*304 Stainless Steel* Part Number
1"	1.843	***17MP-15-G100***
1½"	1.843	***17MP-15-G150***
2"	1.875	***17MP-15-G200***
2½"	2.000	***17MP-15-G250***
3"	2.031	***17MP-15-G300***
4"	2.156	***17MP-15-G400***

Tygon® Hose Adapters - *14MPHT*

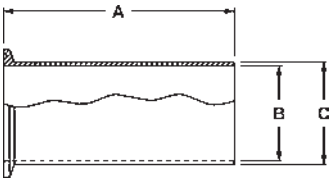

Tube OD	A	B	C	*316L Stainless Steel* Part Number
½"	4.000	.370	.500	***14MPHT-R50***
¾"	4.000	.620	.750	***14MPHT-R75***
1"	4.500	.870	1.000	***14MPHT-R100***
1½"	4.500	1.370	1.500	***14MPHT-R150***
2"	4.500	1.870	2.000	***14MPHT-R200***
2½"	4.500	2.370	2.500	***14MPHT-R250***
3"	4.500	2.870	3.000	***14MPHT-R300***
4"	4.625	3.834	4.000	***14MPHT-R400***
6"	6.000	5.782	6.000	***14MPHT-R600***

Clamp Adapters

Rubber Hose Adapters - *14MPHR*

Tube OD	Hose Size	A	B	*304 Stainless Steel* Part Number	*316L Stainless Steel* Part Number
1/2"	1/8"	1.250	.125	---	***14MPHR-R50125***
1/2"	1/4"	1.500	.250	---	***14MPHR-R5025***
1/2"	3/8"	1.500	.375	---	***14MPHR-R50375***
1/2"	1/2"	1.500	.500	---	***14MPHR-R50***
1/2"	3/4"	1.500	.750	---	***14MPHR-R5075***
3/4"	1/8"	1.500	.125	---	***14MPHR-R75125***
3/4"	1/4"	1.500	.250	---	***14MPHR-R7525***
3/4"	3/8"	1.500	.375	---	***14MPHR-R75375***
3/4"	1/2"	1.500	.500	---	***14MPHR-R7550***
3/4"	3/4"	1.500	.750	---	***14MPHR-R75***
1"	3/8"	1.500	.375	***14MPHR-G100375***	***14MPHR-R100375***
1"	1/2"	1.500	.500	***14MPHR-G10050***	***14MPHR-R10050***
1"	3/4"	1.688	.750	***14MPHR-G10075***	***14MPHR-R10075***
1"	1"	1.688	1.000	***14MPHR-G100***	***14MPHR-R100***
1-1/2"	1/8"	1.500	.125	***14MPHR-G150125***	***14MPHR-R150125***
1-1/2"	1/4"	1.500	.250	---	***14MPHR-R15025***
1-1/2"	3/8"	1.500	.375	***14MPHR-G150375***	***14MPHR-R150375***
1-1/2"	1/2"	1.500	.500	***14MPHR-G15050***	***14MPHR-R15050***
1-1/2"	5/8"	1.500	.625	***14MPHR-G150625***	***14MPHR-R150625***
1-1/2"	3/4"	1.500	.750	***14MPHR-G15075***	***14MPHR-R15075***
1-1/2"	1"	1.687	1.000	***14MPHR-G150100***	***14MPHR-R150100***
1-1/2"	1-1/4"	1.689	1.250	---	***14MPHR-R150-125***
1-1/2"	1-1/2"	1.687	1.500	***14MPHR-G150***	***14MPHR-R150***
2"	1-1/2"	2.312	1.500	***14MPHR-G200150***	***14MPHR-R200150***
2"	2"	2.312	2.000	***14MPHR-G200***	***14MPHR-R200***
2-1/2"	2-1/2"	2.344	2.500	***14MPHR-G250***	***14MPHR-R250***
3"	3"	3.094	3.000	***14MPHR-G300***	***14MPHR-R300***
4"	4"	3.406	4.000	***14MPHR-G400***	***14MPHR-R400***
6"	6"	3.406	6.000	***14MPHR-G600***	***14MPHR-R600***
8"	8"	3.406	8.000	***14MPHR-G800***	***14MPHR-R800***

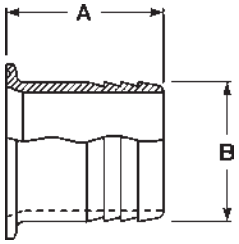

Brewery Hose Barb Adapters - *14MPHRL*

Feature:
- suitable for use with band clamps

Size	A	B	*304 Stainless Steel* Part Number
1"	3.500	1.045	***14MPHRL100***
1½"	5.000	1.545	***14MPHRL150***
2"	5.000	2.045	***14MPHRL200***
2½"	5.500	2.545	***14MPHRL250***
3"	5.500	3.045	***14MPHRL300***
4"	5.500	4.045	***14MPHRL400***

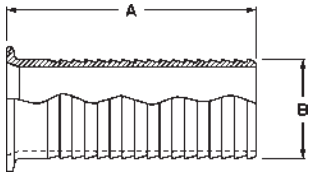

Use of PVC tubing requires special techniques to prevent leakage. All assembly work must be done with heated tube. Cold durometer is 90 as opposed to rubber hose at 65 to 70 durometer. Banding buckles must be at 180° from one another.

Clamp Adapters

Male NPT Adapters - *21MP*

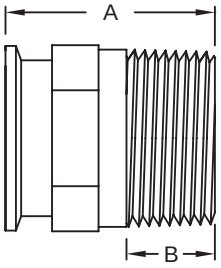

Tube OD	NPT Size	A	B	*304 Stainless Steel* Part Number	*316L Stainless Steel* Part Number
1/2"	1/8"	2.000	.392	---	***21MP-R50125***
1/2"	1/4"	2.000	.595	---	***21MP-R5025***
1/2"	3/8"	2.000	.600	---	***21MP-R50375***
1/2"	1/2"	1.625	.782	---	***21MP-R50***
1/2"	3/4"	2.000	.794	---	***21MP-R5075***
3/4"	1/4"	2.000	.595	---	***21MP-R7525***
3/4"	3/8"	2.000	.600	---	***21MP-R75375***
3/4"	1/2"	2.000	.782	---	***21MP-R7550***
3/4"	3/4"	1.787	.794	---	***21MP-R75***
3/4"	1"	2.250	.985	---	***21MP-R75100***
1"	1/8"	2.187	.392	***21MP-G100-125***	***21MP-R100-125***
1"	1/4"	2.161	.595	***21MP-G10025***	***21MP-R10025***
1"	3/8"	2.187	.600	***21MP-G100375***	***21MP-R100375***
1"	1/2"	2.187	.782	***21MP-G10050***	***21MP-R10050***
1"	3/4"	2.187	.794	***21MP-G10075***	***21MP-R10075***
1"	1"	2.250	.985	***21MP-G100***	***21MP-R100***
1"	1-1/4"	2.438	1.009	***21MP-G100125***	***21MP-R100125***
1"	1-1/2"	2.438	1.025	***21MP-G100150***	***21MP-R100150***
1"	2"	2.625	1.058	***21MP-G100200***	***21MP-R100200***
1-1/2"	1/8"	2.187	.392	---	***21MP-R150-125***
1-1/2"	1/4"	2.161	.595	***21MP-G15025***	***21MP-R15025***
1-1/2"	3/8"	2.187	.600	***21MP-G150375***	***21MP-R150375***
1-1/2"	1/2"	2.187	.782	***21MP-G15050***	***21MP-R15050***
1-1/2"	3/4"	2.187	.794	***21MP-G15075***	***21MP-R15075***
1-1/2"	1"	2.437	.985	***21MP-G150100***	***21MP-R150100***
1-1/2"	1-1/4"	2.438	1.009	***21MP-G150125***	***21MP-R150125***
1-1/2"	1-1/2"	2.250	1.025	***21MP-G150***	***21MP-R150***
1-1/2"	2"	2.625	1.058	***21MP-G150200***	***21MP-R150200***
1-1/2"	2-1/2"	3.281	1.571	***21MP-G150250***	***21MP-R150250***
2"	1/4"	2.469	1.009	***21MP-G200125***	***21MP-R200125***
2"	1/2"	2.188	.782	***21MP-G20050***	***21MP-R20050***
2"	3/4"	2.188	.794	***21MP-G20075***	***21MP-R20075***
2"	1"	2.469	.985	***21MP-G200100***	***21MP-R200100***
2"	1-1/2"	2.625	1.009	***21MP-G200150***	***21MP-R200150***
2"	2"	2.638	1.058	***21MP-G200***	***21MP-R200***
2"	2-1/2"	3.125	1.571	***21MP-G200250***	***21MP-R200250***
2"	3"	3.500	1.634	***21MP-G200300***	***21MP-R200300***
2"	4"	3.500	1.734	***21MP-G200400***	***21MP-R200400***
2-1/2"	1/2"	2.781	.782	***21MP-G25050***	***21MP-R25050***
2-1/2"	1"	2.781	.782	***21MP-G250100***	***21MP-R250100***
2-1/2"	1-1/2"	2.781	1.025	***21MP-G250150***	***21MP-R250150***
2-1/2"	2"	2.781	1.058	***21MP-G250200***	***21MP-R250200***
2-1/2"	2-1/2"	2.875	1.571	***21MP-G250***	***21MP-R250***
2-1/2"	3"	3.690	1.634	***21MP-G250300***	***21MP-R250300***
3"	1"	3.000	.985	***21MP-G300100***	***21MP-R300100***
3"	1-1/2"	3.000	1.009	***21MP-G300150***	***21MP-R300150***
3"	2"	3.000	1.058	***21MP-G300200***	***21MP-R300200***
3"	2-1/2"	3.000	1.571	***21MP-G300250***	***21MP-R300250***
3"	3"	3.070	1.634	***21MP-G300***	***21MP-R300***
3"	4"	3.500	1.734	***21MP-G300400***	***21MP-R300400***
4"	3"	3.813	1.634	***21MP-G400300***	***21MP-R400300***
4"	4"	3.155	1.734	***21MP-G400***	***21MP-R400***
6"	6"	4.500	1.946	***21MP-G600***	***21MP-R600***

• see pages 240-241 for Pipe Thread data

Clamp Adapters

Female NPT Adapters - *22MP*

Tube OD	NPT Size	A	*304 Stainless Steel* Part Number	*316L Stainless Steel* Part Number
1/2"	1/8"	1.250	---	22MP-R50-125
1/2"	1/4"	1.500	---	22MP-R5025
1/2"	3/8"	1.500	---	22MP-R50375
1/2"	1/2"	1.500	---	22MP-R50
1/2"	3/4"	1.500	---	22MP-R5075
1/2"	1"	1.625	---	22MP-R50100
1/2"	1-1/2"	2.250	---	22MP-R50150
1/2"	2"	2.250	---	22MP-R50200
3/4"	1/8"	1.250	---	22MP-R75125
3/4"	1/4"	1.500	---	22MP-R7525
3/4"	3/8"	1.500	---	22MP-R75375
3/4"	1/2"	1.625	---	22MP-R7550
3/4"	3/4"	1.625	---	22MP-R75
3/4"	1"	1.625	---	22MP-R75100
1"	1/8"	3.281	22MP-G100-125	22MP-R100-125
1"	1/4"	1.625	22MP-G10025	22MP-R10025
1"	3/8"	1.625	22MP-G100375	22MP-R100375
1"	1/2"	1.625	22MP-G10050	22MP-R10050
1"	3/4"	1.625	22MP-G10075	22MP-R10075
1"	1"	1.625	22MP-G100	22MP-R100
1"	1-1/4"	1.625	22MP-G100125	22MP-R100125
1"	1-1/2"	1.625	22MP-G100150	22MP-R100150
1"	2"	2.500	22MP-G100200	22MP-R100200
1-1/2"	1/8"	2.500	22MP-G150-125	22MP-R150-125
1-1/2"	1/4"	1.625	22MP-G15025	22MP-R15025
1-1/2"	3/8"	1.625	22MP-G150375	22MP-R150375
1-1/2"	1/2"	1.625	22MP-G15050	22MP-R15050
1-1/2"	3/4"	1.625	22MP-G15075	22MP-R15075
1-1/2"	1"	2.250	22MP-G150100	22MP-R150100
1-1/2"	1-1/4"	2.250	22MP-G150125	22MP-R150125
1-1/2"	1-1/2"	2.250	22MP-G150	22MP-R150
1-1/2"	2"	2.500	22MP-G150200	22MP-R150200
1-1/2"	2-1/2"	2.500	22MP-G150250	22MP-R150250
1-1/2"	3"	2.500	22MP-G150300	22MP-R150300
2"	1/4"	1.687	22MP-G20025	22MP-R20025
2"	1/2"	1.687	22MP-G20050	22MP-R20050
2"	3/4"	1.687	22MP-G20075	22MP-R20075
2"	1"	1.687	22MP-G200100	22MP-R200100
2"	1-1/4"	1.656	22MP-G200125	22MP-R200125
2"	1-1/2"	2.344	22MP-G200150	22MP-R200150
2"	2"	2.406	22MP-G200	22MP-R200
2"	2-1/2"	2.406	22MP-G200250	22MP-R200250
2"	3"	2.406	22MP-G200300	22MP-R200300
2"	4"	2.406	22MP-G200400	---
2-1/2"	3/4"	1.313	22MP-G25075	22MP-R25075
2-1/2"	1"	1.313	22MP-G250100	22MP-R250100
2-1/2"	1-1/2"	1.656	22MP-G250150	22MP-R250150
2-1/2"	2"	2.093	22MP-G250200	22MP-R250200
2-1/2"	2-1/2"	2.187	22MP-G250	22MP-R250
2-1/2"	3"	2.187	22MP-G250300	22MP-R250300
3"	1"	2.187	22MP-G300100	22MP-R300100
3"	1-1/2"	2.187	22MP-G300150	22MP-R300150
3"	2"	2.187	22MP-G300200	22MP-R300200
3"	2-1/2"	2.187	22MP-G300250	22MP-R300250
3"	3"	2.187	22MP-G300	22MP-R300
4"	1-1/2"	2.187	22MP-G400150	22MP-R400150
4"	2"	2.187	22MP-G400200	22MP-R400200
4"	2-1/2"	2.187	22MP-G400250	22MP-R400250
4"	3"	2.187	22MP-G400300	22MP-R400300
4"	4"	3.652	22MP-G400	22MP-R400
4"	6"	3.250	22MP-G400600	22MP-R400600

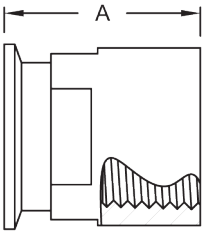

- see pages 240-241 for Pipe Thread data

Clamp Elbows

90° Clamp Elbows - *B2CMP*

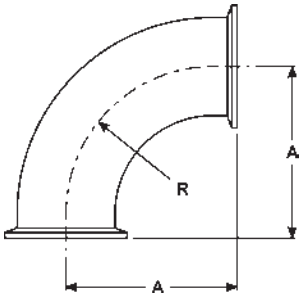

Tube OD	A	R	*304 Stainless Steel* Part Number	*316L Stainless Steel* Part Number
½"	1.625	1.125	---	***B2CMP-R50***
¾"	1.625	1.125	---	***B2CMP-R75***
½"	3.500	1.125	---	***B2CMPL-R50***
¾"	3.500	1.125	---	***B2CMPL-R75***
1"	2.000	1.500	***B2CMP-G100***	***B2CMP-R100***
1½"	2.750	2.250	***B2CMP-G150***	***B2CMP-R150***
2"	3.500	3.000	***B2CMP-G200***	***B2CMP-R200***
2½"	4.250	3.750	***B2CMP-G250***	***B2CMP-R250***
3"	5.000	4.500	***B2CMP-G300***	***B2CMP-R300***
4"	6.625	6.000	***B2CMP-G400***	***B2CMP-R400***
6"	9.875	9.000	***B2CMP-G600***	***B2CMP-R600***
8"	12.875	12.000	***B2CMP-G800***	***B2CMP-R800***
10"	15.875	15.000	***B2CMP-G1000***	---
12"	18.875	18.000	***B2CMP-G1200***	---

Clamp Elbows

90° Non-Tapered Reducing Clamp Elbows - *B2CM31MP*

Tube OD	A	B	*304 Stainless Steel* Part Number	*316L Stainless Steel* Part Number
2" x 1½"	2.750	2.750	***B2CM31MPG200150***	***B2CM31MPR200150***
2½" x 2"	3.500	3.500	***B2CM31MPG250200***	***B2CM31MPR250200***
3" x 2"	3.500	3.500	***B2CM31MPG300200***	***B2CM31MPR300200***
3" x 2½"	4.250	4.250	***B2CM31MPG300250***	***B2CM31MPR300250***

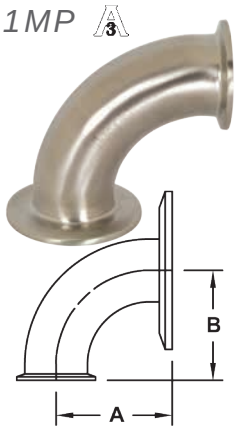

45° Clamp Elbows - *B2KMP*

Tube OD	A	R	*304 Stainless Steel* Part Number	*316L Stainless Steel* Part Number
½"	.966	1.125	---	***B2KMP-R50***
¾"	.966	1.125	---	***B2KMP-R75***
1"	1.125	1.500	***B2KMP-G100***	***B2KMP-R100***
1½"	1.437	2.250	***B2KMP-G150***	***B2KMP-R150***
2"	1.750	3.000	***B2KMP-G200***	***B2KMP-R200***
2½"	2.062	3.750	***B2KMP-G250***	***B2KMP-R250***
3"	2.375	4.500	***B2KMP-G300***	***B2KMP-R300***
4"	3.125	6.000	***B2KMP-G400***	***B2KMP-R400***
6"	4.625	9.000	***B2KMP-G600***	***B2KMP-R600***
8"	5.875	12.000	***B2KMP-G800***	***B2KMP-R800***
10"	7.125	15.000	***B2KMP-G1000***	---
12"	8.375	18.000	***B2KMP-G1200***	---

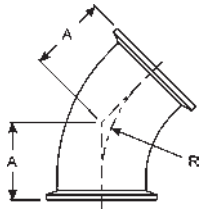

90° Clamp by Plain Bevel Seat with Hex Nut Elbows - *B2FMP-14*

Tube OD	A	B	*304 Stainless Steel* Part Number
1"	2.218	2.000	***B2FMP-14-G100***
1½"	2.968	2.750	***B2FMP-14-G150***
2"	3.750	3.500	***B2FMP-14-G200***
2½"	4.625	4.250	***B2FMP-14-G250***
3"	5.406	5.000	***B2FMP-14-G300***
4"	7.031	6.625	***B2FMP-14-G400***

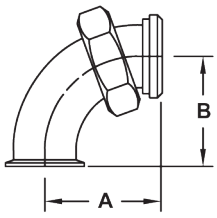

Other types of elbows available call Dixon Sanitary for information

B2CMP-14

B2FMP-15

B2SXLMP
various radii

Clamp Tees

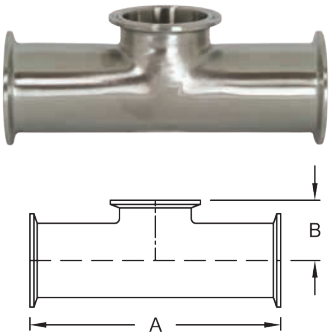

Short Outlet Tees - *B7MPS*

Tube OD	A	B	*304 Stainless Steel* Part Number	*316L Stainless Steel* Part Number
1"	4.750	1.125	***B7MPS-G100***	***B7MPS-R100***
1½"	5.500	1.375	***B7MPS-G150***	***B7MPS-R150***
2"	7.000	1.625	***B7MPS-G200***	***B7MPS-R200***
2½"	7.000	1.875	***B7MPS-G250***	***B7MPS-R250***
3"	7.500	2.125	***B7MPS-G300***	***B7MPS-R300***
4"	9.000	2.750	***B7MPS-G400***	***B7MPS-R400***

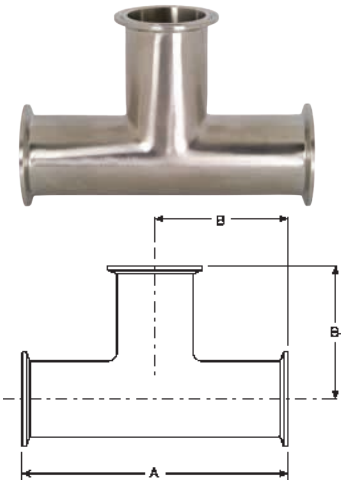

Clamp Tees - *B7MP*

Tube OD	A	B	*304 Stainless Steel* Part Number	*316L Stainless Steel* Part Number
½"	4.750	2.375	---	***B7MP-R50***
¾"	5.000	2.500	---	***B7MP-R75***
1"	4.750	2.375	***B7MP-G100***	***B7MP-R100***
1½"	5.500	2.750	***B7MP-G150***	***B7MP-R150***
2"	7.000	3.500	***B7MP-G200***	***B7MP-R200***
2½"	7.000	3.500	***B7MP-G250***	***B7MP-R250***
3"	7.500	3.750	***B7MP-G300***	***B7MP-R300***
4"	9.000	4.500	***B7MP-G400***	***B7MP-R400***
6"	13.000	6.500	***B7MP-G600***	***B7MP-R600***
8"	15.750	7.875	***B7MP-G800***	***B7MP-R800***
10"	18.750	9.735	***B7MP-G1000***	---
12"	21.750	10.735	***B7MP-G1200***	---

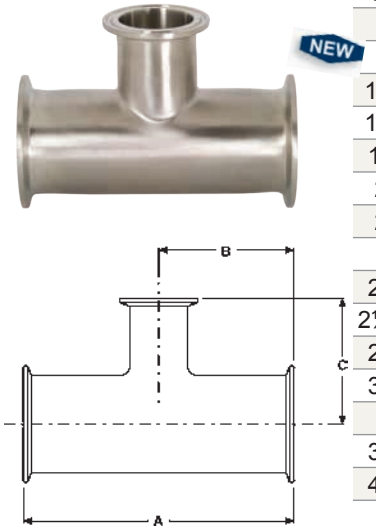

Clamp Reducing Tees - *B7RMP*

Tube OD	A	B	C	*304 Stainless Steel* Part Number	*316L Stainless Steel* Part Number
¾" x ½"	5.000	2.500	2.500	---	***B7RMP-R7550***
1" x ½"	5.250	2.625	2.625	---	***B7RMP-R10050***
1" x ¾"	5.250	2.625	2.625	---	***B7RMP-R10075***
1½" x ½"	5.750	2.875	2.875	---	***B7RMP-R15050***
1½" x ¾"	5.250	2.875	2.875	---	***B7RMP-R15075***
1½" x 1"	4.312	2.156	1.875	***B7RMP-G150100***	***B7RMP-R150100***
2" x ½"	6.750	3.375	3.125	---	***B7RMP-R20050***
2" x ¾"	6.750	3.375	3.125	---	***B7RMP-R20075***
2" x 1"	5.125	2.562	2.125	***B7RMP-G200100***	***B7RMP-R200100***
2" x 1½"	5.125	2.562	2.406	***B7RMP-G200150***	***B7RMP-R200150***
2½" x 1½"	5.688	2.844	2.656	***B7RMP-G250150***	***B7RMP-R250150***
2½" x 2"	5.688	2.844	2.812	***B7RMP-G250200***	***B7RMP-R250200***
3" x 1½"	6.188	3.093	2.906	***B7RMP-G300150***	***B7RMP-R300150***
3" x 2"	6.188	3.093	3.063	***B7RMP-G300200***	***B7RMP-R300200***
3" x 2½"	6.188	3.093	3.093	***B7RMP-G300250***	***B7RMP-R300250***
4" x 1½"	8.125	4.063	3.406	***B7RMP-G400150***	***B7RMP-R400150***
4" x 2"	8.125	4.063	3.563	***B7RMP-G400200***	***B7RMP-R400200***
4" x 2½"	8.125	4.063	3.594	***B7RMP-G400250***	***B7RMP-R400250***
4" x 3"	8.125	4.063	3.594	***B7RMP-G400300***	***B7RMP-R400300***

Other types of tees available call Dixon Sanitary for information

B7RMPS

Clamp Reducers

Clamp Concentric Reducers - *B3114MP*

Tube OD	A	*304 Stainless Steel* Part Number	*316L Stainless Steel* Part Number
¾" x ½"	2.000	---	**B3114MP-R7550**
1" x ½"	3.000	---	**B3114MP-R10050**
1" x ¾"	2.000	---	**B3114MP-R10075**
1½" x ½"	5.000	---	**B3114MP-R15050**
1½" x ¾"	4.000	---	**B3114MP-R15075**
1½" x 1"	3.000	**B3114MP-G150100**	**B3114MP-R150100**
2" x ½"	7.000	---	**B3114MP-R20050**
2" x ¾"	6.000	---	**B3114MP-R20075**
2" x 1"	5.000	**B3114MP-G200100**	**B3114MP-R200100**
2" x 1½"	3.000	**B3114MP-G200150**	**B3114MP-R200150**
2½" x 1½"	5.000	**B3114MP-G250150**	**B3114MP-R250150**
2½" x 2"	3.000	**B3114MP-G250200**	**B3114MP-R250200**
3" x 1"	9.000	**B3114MP-G300100**	**B3114MP-R300100**
3" x 1½"	7.000	**B3114MP-G300150**	**B3114MP-R300150**
3" x 2"	5.000	**B3114MP-G300200**	**B3114MP-R300200**
3" x 2½"	3.000	**B3114MP-G300250**	**B3114MP-R300250**
4" x 1½"	11.125	**B3114MP-G400150**	**B3114MP-R400150**
4" x 2"	9.125	**B3114MP-G400200**	**B3114MP-R400200**
4" x 2½"	7.125	**B3114MP-G400250**	**B3114MP-R400250**
4" x 3"	5.125	**B3114MP-G400300**	**B3114MP-R400300**
6" x 2"	6.875	**B3114MP-G600200**	**B3114MP-R600200**
6" x 3"	6.875	**B3114MP-G600300**	**B3114MP-R600300**
6" x 4"	7.000	**B3114MP-G600400**	**B3114MP-R600400**
8" x 4"	7.500	**B3114MP-G800400**	**B3114MP-R800400**
8" x 6"	7.750	**B3114MP-G800600**	**B3114MP-R800600**

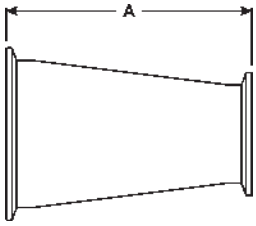

Plain Bevel Seat x Clamp Concentric Reducers - *B14C31*

Tube OD	A	*304 Stainless Steel* Part Number
1½" x 1"	3.218	**B14C31-G150100 ***
2" x 1½"	3.250	**B14C31-G200150**
2½" x 1½"	5.375	**B14C31-G250150**
2½" x 2"	3.375	**B14C31-G250200**
3" x 1½"	7.406	**B14C31-G300150**
3" x 2"	5.406	**B14C31-G300200**
3" x 2½"	3.406	**B14C31-G300250**

* comes with 13H-G150, hex nut cannot be assembled on fitting after welding

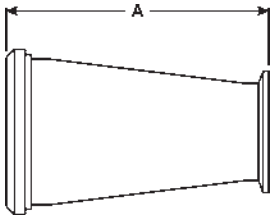

Other types of concentric reducers available call Dixon Sanitary for information

B3114

B3115

B15C31

Clamp Reducers

Clamp Eccentric Reducers - *B3214MP*

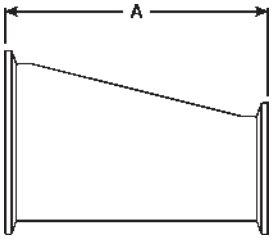

Tube OD	A	*304 Stainless Steel* Part Number	*316L Stainless Steel* Part Number
¾" x ½"	2.000	---	***B3214MP-R7550***
1" x ½"	3.000	---	***B3214MP-R10050***
1" x ¾"	2.000	---	***B3214MP-R10075***
1½" x ½"	5.000	---	***B3214MP-R15050***
1½" x ¾"	4.000	---	***B3214MP-R15075***
1½" x 1"	3.000	***B3214MP-G150100***	***B3214MP-R150100***
2" x ½"	7.000	---	***B3214MP-R20050***
2" X ¾"	6.000	---	***B3214MP-R20075***
2" x 1"	5.000	***B3214MP-G200100***	***B3214MP-R200100***
2" x 1½"	3.000	***B3214MP-G200150***	***B3214MP-R200150***
2½" x 1½"	5.000	***B3214MP-G250150***	***B3214MP-R250150***
2½" x 2"	3.000	***B3214MP-G250200***	***B3214MP-R250200***
3" x 1"	9.000	***B3214MP-G300100***	***B3214MP-R300100***
3" x 1½"	7.000	***B3214MP-G300150***	***B3214MP-R300150***
3" x 2"	5.000	***B3214MP-G300200***	***B3214MP-R300200***
3" x 2½"	3.000	***B3214MP-G300250***	***B3214MP-R300250***
4" x 1½"	11.125	***B3214MP-G400150***	***B3214MP-R400150***
4" x 2"	9.125	***B3214MP-G400200***	***B3214MP-R400200***
4" x 2½"	7.125	***B3214MP-G400250***	***B3214MP-R400250***
4" x 3"	5.125	***B3214MP-G400300***	***B3214MP-R400300***
6" x 3"	6.875	***B3214MP-G600300***	***B3214MP-R600300***
6" x 4"	7.000	***B3214MP-G600400***	***B3214MP-R600400***
8" x 4"	7.500	***B3214MP-G800400***	***B3214MP-R800400***
8" x 6"	7.750	***B3214MP-G800600***	***B3214MP-R800600***

Other types of eccentric reducers available call Dixon Sanitary for information

B3214

B14C32

B3215

B15C32

Miscellaneous Clamp Configurations

Spool Assembly - *SPOOL*

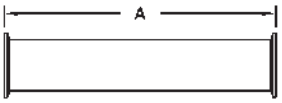

Tube OD	A (minimum length)	*304 Stainless Steel* Part Number	*316L Stainless Steel* Part Number
½"	2.25	***SPOOL*-G050***	***SPOOL*-R050***
¾"	2.25	***SPOOL*-G075***	***SPOOL*-R075***
1"	2.25	***SPOOL*-G100***	***SPOOL*-R100***
1½"	2.25	***SPOOL*-G150***	***SPOOL*-R150***
2"	2.25	***SPOOL*-G200***	***SPOOL*-R200***
2½"	2.25	***SPOOL*-G250***	***SPOOL*-R250***
3"	2.25	***SPOOL*-G300***	***SPOOL*-R300***
4"	2.25	***SPOOL*-G400***	***SPOOL*-R400***
6"	3.00	***SPOOL*-G600***	***SPOOL*-R600***

* overall length in inches

Miscellaneous Clamp Configurations

Clamp Laterals - *B28AMP*

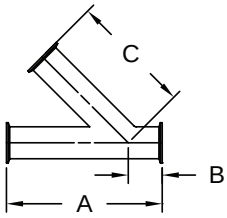

Tube OD	A	B	C	*316L Stainless Steel* Part Number
1"	7.000	1.500	5.500	***B28AMP-R100***
1½"	8.375	1.688	6.688	***B28AMP-R150***
2"	9.750	2.125	7.625	***B28AMP-R200***
2½"	11.000	2.000	9.000	***B28AMP-R250***
3"	11.750	2.375	9.375	***B28AMP-R300***
4"	14.062	2.640	11.312	***B28AMP-R400***

Clamp True Wyes - *B28BMP*

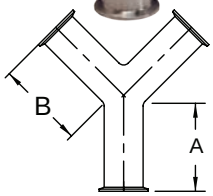

Tube OD	A	B	*316L Stainless Steel* Part Number
1"	2.500	2.938	***B28BMP-R100***
1½"	2.500	2.938	***B28BMP-R150***
2"	3.125	3.750	***B28BMP-R200***
2½"	3.870	4.625	***B28BMP-R250***
3"	4.500	5.375	***B28BMP-R300***
4"	6.000	6.000	***B28BMP-R400***

Clamp Crosses - *B9MP*

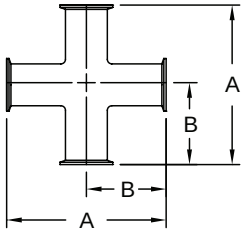

Tube OD	A	B	*304 Stainless Steel* Part Number	*316L Stainless Steel* Part Number
1"	4.750	2.375	***B9MP-G100***	***B9MP-R100***
1½"	5.500	2.750	***B9MP-G150***	***B9MP-R150***
2"	7.000	3.500	***B9MP-G200***	***B9MP-R200***
2½"	7.000	3.500	***B9MP-G250***	***B9MP-R250***
3"	7.500	3.750	***B9MP-G300***	***B9MP-R300***
4"	9.000	4.500	***B9MP-G400***	***B9MP-R400***

Clamp 180° Return Bends - *B2WUMP*

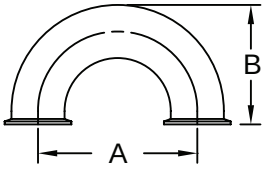

- bends are 1.5 x tube diameter

Tube OD	A	B	*316L Stainless Steel* Part Number
1"	3.000	2.500	***B2WUMP-R100***
1½"	4.500	3.500	***B2WUMP-R150***
2"	6.000	4.500	***B2WUMP-R200***
2½"	7.500	5.500	***B2WUMP-R250***
3"	9.000	6.500	***B2WUMP-R300***
4"	12.000	8.625	***B2WUMP-R400***

Clamp End Protection Covers - *BCC*

Size	Part Number
½"	***BCC-050***
¾"	***BCC-075***
1"	***BCC-100***
1½"	***BCC-150***
2"	***BCC-200***
2½"	***BCC-250***
3"	***BCC-300***
4"	***BCC-400***
6"	***BCC-600***
8"	***BCC-800***

Features:

- Use these covers to protect all clamp ends on fittings, valves, filters and pumps.
- vinyl plastic

Clamp Gaskets

Buna-N Clamp Gaskets - *Black*

Type 1 - Standard
½" - ¾"

Type 1 - Standard
1" and larger

Features:
- color code: red dot
- meets 21CFR 177.2600

Size	Part Number
½"	***42MP-U50***
¾"	***42MP-U75***
1"	***40MP-U100***
1½"	***40MP-U150***
2"	***40MP-U200***
2½"	***40MP-U250***
3"	***40MP-U300***
4"	***40MP-U400***
5"	***40MP-U500***
6"	***40MP-U600***
8"	***40MP-U800***

Buna-N Clamp Gaskets - *White*

Type 1 - Standard
½" - ¾"

Type 1 - Standard
1" and larger

Features:
- color code: red dot
- meets 21CFR 177.2600

Size	Part Number
½"	***42MP-UW50***
¾"	***42MP-UW75***
1"	***40MP-UW100***
1½"	***40MP-UW150***
2"	***40MP-UW200***
2½"	***40MP-UW250***
3"	***40MP-UW300***
4"	***40MP-UW400***
6"	***40MP-UW600***

EPDM Clamp Gaskets - *Black*

Type 1 - Standard
½" - ¾"

Type 1 - Standard
1" and larger

Features:
- color code: three green dots
- peroxide cured
- meets 21CFR 177.2600
- passed U.S.P. Class VI Cytotoxicity testing

Size	Part Number
½"	***42MP-E50***
¾"	***42MP-E75***
1"	***40MP-E100***
1½"	***40MP-E150***
2"	***40MP-E200***
2½"	***40MP-E250***
3"	***40MP-E300***
4"	***40MP-E400***
5"	***40MP-E500***
6"	***40MP-E600***

FKM Clamp Gaskets - *Black*

Type 1 - Standard
½" - ¾"

Type 1 - Standard
1" and larger

Features:
- color code: one white dot and one yellow dot
- peroxide cured
- meets 21CFR 177.2600
- passed U.S.P. Class VI Cytotoxicity testing

Size	Part Number
½"	***42MP-SFY50***
¾"	***42MP-SFY75***
1"	***40MP-SFY100***
1½"	***40MP-SFY150***
2"	***40MP-SFY200***
2½"	***40MP-SFY250***
3"	***40MP-SFY300***
4"	***40MP-SFY400***
6"	***40MP-SFY600***

Note: see pages 232-233 for sizing charts / refer to pages 234-236 for compatibility information

Clamp Gaskets

Silicone Clamp Gaskets - *White*

Size	Part Number
½"	***42MP-XW50***
¾"	***42MP-XW75***
1"	***40MP-XW100***
1½"	***40MP-XW150***
2"	***40MP-XW200***
2½"	***40MP-XW250***
3"	***40MP-XW300***
4"	***40MP-XW400***
6"	***40MP-XW600***

Type 1 - Standard
½" - ¾"

Type 1 - Standard
1" and larger

Features:
- color code: pink dot
- peroxide cured
- meets 21CFR 177.2600
- passed U.S.P. Class VI Cytotoxicity testing

Silicone Clamp Gaskets - *Clear*

Size	Part Number
½"	***42MP-XC50***
¾"	***42MP-XC75***
1"	***40MP-XC100***
1½"	***40MP-XC150***
2"	***40MP-XC200***
2½"	***40MP-XC250***
3"	***40MP-XC300***
4"	***40MP-XC400***

Type 1 - Standard
½" - ¾"

Type 1 - Standard
1" and larger

Features:
- color code: no dot
- peroxide cured
- meets 21CFR 177.2600
- passed U.S.P. Class VI Cytotoxicity testing

PTFE Clamp Gaskets - *White*

Size	Part Number
½"	***42MP-G50***
¾"	***42MP-G75***
1"	***40MP-G100***
1½"	***40MP-G150***
2"	***40MP-G200***
2½"	***40MP-G250***
3"	***40MP-G300***
4"	***40MP-G400***
5"	***40MP-G500***
6"	***40MP-G600***
8"	***40MP-G800***
10"	***40MP-G1000***
12"	***40MP-G1200***

Type 1 - Standard
½" - ¾"

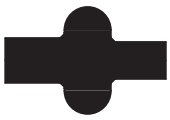

Type 1 - Standard
1" and larger

Features:
- color code: no dot
- meets 21CFR 177.1550
- passed U.S.P. Class VI Cytotoxicity testing
- not recommended for use with bolted clamps

PTFE is a material subject to plastic flow. When cycled through heat and then cooled down in process lines, PTFE gaskets will not return to the original configuration and it will continue to compress as the cycling continues. This plastic flow will allow leakage if clamp torques are not maintained.

Note: see pages 232-233 for sizing charts / refer to pages 234-236 for compatibility information

Clamp Gaskets

Metal Detectable Clamp Gaskets

Type 1 - Standard
½" - ¾"

Type 1 - Standard
1" and larger

Features:
- Metal detectable gaskets are impregnated with stainless steel particles. The addition of stainless steel allows a gasket or gasket pieces to be found with metal detection equipment.

Buna-N - *Metal Detectable Clamp Gaskets*

Features:
- minimum temp **-20°F**
- maximum temp **212°F**
- good general use where temperature extremes do not exist

Size	Part Number
1"	***40MP-UZ100***
1½"	***40MP-UZ150***
2"	***40MP-UZ200***
2½"	***40MP-UZ250***
3"	***40MP-UZ300***
4"	***40MP-UZ400***

EPDM - *Metal Detectable Clamp Gaskets*

Features:
- minimum temp **-70°F**
- maximum temp **310°F**
- resistant to steam, water and base solutions

Size	Part Number
1"	***40MP-EZ100***
1½"	***40MP-EZ150***
2"	***40MP-EZ200***
2½"	***40MP-EZ250***
3"	***40MP-EZ300***
4"	***40MP-EZ400***

FKM - *Metal Detectable Clamp Gaskets*

Features:
- minimum temp **-20°F**
- maximum temp **410°F**
- resistant to steam, heat and high acid solutions

Size	Part Number
1"	***40MP-SFYZ100***
1½"	***40MP-SFYZ150***
2"	***40MP-SFYZ200***
2½"	***40MP-SFYZ250***
3"	***40MP-SFYZ300***
4"	***40MP-SFYZ400***

Note: see pages 232-233 for sizing charts / refer to pages 234-236 for compatibility information

Clamp Flanged Gaskets

Buna-N - *Flanged Clamp Gaskets - Black*

Size	Part Number
1"	***40MPF-U100***
1½"	***40MPF-U150***
2"	***40MPF-U200***
2½"	***40MPF-U250***
3"	***40MPF-U300***
4"	***40MPF-U400***
6"	***40MPF-U600***
8"	***40MPF-U800***
10"	***40MPF-U1000***
12"	***40MPF-U1200***

Type 2 - Flanged
1" and larger

Features:
- color code: red dot
- meets 21CFR 177.2600
- not recommended for use with bolted clamps

Buna-N - *Flanged Clamp Gaskets - White*

Size	Part Number
1"	***40MPF-UW100***
1½"	***40MPF-UW150***
2"	***40MPF-UW200***
2½"	***40MPF-UW250***
3"	***40MPF-UW300***
4"	***40MPF-UW400***
6"	***40MPF-UW600***
8"	***40MPF-UW800***

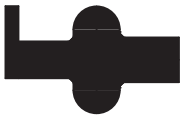

Type 2 - Flanged
1" and larger

Features:
- color code: red dot
- meets 21CFR 177.2600
- not recommended for use with bolted clamps

EPDM - *Flanged Clamp Gaskets - Black*

Size	Part Number
1"	***40MPF-E100***
1½"	***40MPF-E150***
2"	***40MPF-E200***
2½"	***40MPF-E250***
3"	***40MPF-E300***
4"	***40MPF-E400***
6"	***40MPF-E600***
8"	***40MPF-E800***
10"	***40MPF-E1000***
12"	***40MPF-E1200***

Type 2 - Flanged
1" and larger

Features:
- color code: three green dots
- peroxide cured
- meets 21CFR 177.2600
- passed U.S.P. Class VI Cytotoxicity testing
- not recommended for use with bolted clamps

Note: see pages 232-233 for sizing charts / refer to pages 234-236 for compatibility information

Clamp Flanged Gaskets

FKM - *Flanged Clamp Gaskets - Black*

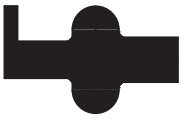

Type 2 - Flanged
1" and larger

Features:
- color code: one white dot, one yellow dot
- peroxide cured
- meets 21CFR 177.2600
- passed U.S.P. Class VI Cytotoxicity testing
- not recommended for use with bolted clamps

Size	Part Number
1"	***40MPF-SFY100***
1½"	***40MPF-SFY150***
2"	***40MPF-SFY200***
2½"	***40MPF-SFY250***
3"	***40MPF-SFY300***
4"	***40MPF-SFY400***
6"	***40MPF-SFY600***
8"	***40MPF-SFY800***
10"	***40MPF-SFY1000***
12"	***40MPF-SFY1200***

Silicone - *Flanged Clamp Gaskets - White*

Type 2 - Flanged
1" and larger

Features:
- color code: pink dot
- peroxide cured
- meets 21CFR 177.2600
- passed U.S.P. Class VI Cytotoxicity testing
- not recommended for use with bolted clamps

Size	Part Number
1"	***40MPF-XW100***
1½"	***40MPF-XW150***
2"	***40MPF-XW200***
2½"	***40MPF-XW250***
3"	***40MPF-XW300***
4"	***40MPF-XW400***
6"	***40MPF-XW600***
8"	***40MPF-XW800***
10"	***40MPF-XW1000***
12"	***40MPF-XW1200***

Silicone - *Flanged Clamp Gaskets - Clear*

Type 2 - Flanged
1" and larger

Features:
- color code: no dot
- peroxide cured
- meets 21CFR 177.2600
- passed U.S.P. Class VI Cytotoxicity testing
- not recommended for use with bolted clamps

Size	Part Number
1"	***40MPF-XC100***
1½"	***40MPF-XC150***
2"	***40MPF-XC200***
2½"	***40MPF-XC250***
3"	***40MPF-XC300***
4"	***40MPF-XC400***
6"	***40MPF-XC600***
8"	***40MPF-XC800***

Note: see pages 232-233 for sizing charts / refer to pages 234-236 for compatibility information

Clamp Screened Gaskets

Buna-N - Mesh Screen *Clamp Gaskets, 316*

Size	Part Number
1"	***40MPS-U100***
1½"	***40MPS-U150***
2"	***40MPS-U200***
2½"	***40MPS-U250***
3"	***40MPS-U300***
4"	***40MPS-U400***

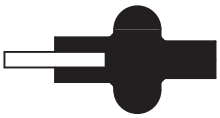

Type 3 - Mesh

Features:
- color code: red dot
- 10 mesh standard, other mesh available, call for details
- meets 21CFR 177.2600

EPDM - Mesh Screen *Clamp Gaskets, 316*

Size	Part Number
1"	***40MPS-E100***
1½"	***40MPS-E150***
2"	***40MPS-E200***
2½"	***40MPS-E250***
3"	***40MPS-E300***
4"	***40MPS-E400***

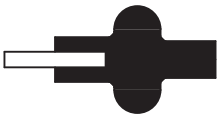

Type 3 - Mesh

Features:
- color code: three green dots
- 10 mesh standard, other materials available, call for details
- peroxide cured
- meets 21CFR 177.2600

FKM - Mesh Screen *Clamp Gaskets, 316*

Size	Part Number
1"	***40MPS-SFY100***
1½"	***40MPS-SFY150***
2"	***40MPS-SFY200***
2½"	***40MPS-SFY250***
3"	***40MPS-SFY300***
4"	***40MPS-SFY400***

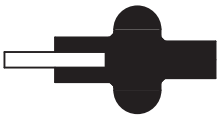

Type 3 - Mesh

Features:
- color code: one white dot, one yellow dot
- 10 mesh standard, other mesh available, call for details
- peroxide cured
- meets 21CFR 177.2600

Note: see pages 232-233 for sizing charts / refer to pages 234-236 for compatibility information / refer to page 231 for additional mesh sizes

Clamp Perforated Gaskets

Buna-N Perforated Clamp Gaskets - *.033" holes*

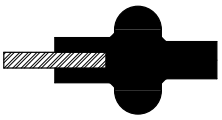

Type 3 - Perforated

Features:
- color code: red dot
- perforated metal disc 316 stainless steel sheet
- meets 21CFR 177.2600

Size	Part Number
1"	***40MP-UP100***
1½"	***40MP-UP150***
2"	***40MP-UP200***
2½"	***40MP-UP250***
3"	***40MP-UP300***
4"	***40MP-UP400***

Clamp **Orifice Gaskets**

Buna-N Orifice Clamp Gaskets - *Black, .125" hole*

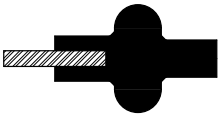

Type 3

Features:
- color code: red dot
- 316 stainless steel sheet;
  other hole sizes available, call for details
- meets 21CFR 177.2600

Size	Part Number
1"	***A80MP-U100***
1½"	***A80MP-U150***
2"	***A80MP-U200***
2½"	***A80MP-U250***
3"	***A80MP-U300***
4"	***A80MP-U400***

FKM Orifice Clamp Gaskets - *.125" hole*

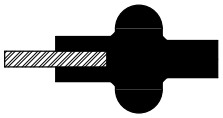

Type 3

Features:
- color code: one white dot, one yellow dot
- 316 stainless steel sheet;
  other hole sizes available, call for details
- peroxide cured
- meets 21CFR 177.2600

Size	Part Number
1"	***A80MP-SFY100***
1½"	***A80MP-SFY150***
2"	***A80MP-SFY200***
2½"	***A80MP-SFY250***
3"	***A80MP-SFY300***
4"	***A80MP-SFY400***

Note: see pages 232-233 for sizing charts / refer to pages 234-236 for compatibility information

Clamp Envelope Gaskets

PTFE envelope clamp gaskets with EPDM filler

Size	Part Number
½"	***42MP-GRE50***
¾"	***42MP-GRE75***
1"	***40MP-GRE100***
1½"	***40MP-GRE150***
2"	***40MP-GRE200***
2½"	***40MP-GRE250***
3"	***40MP-GRE300***
4"	***40MP-GRE400***
6"	***40MP-GRE600***

Features:
- color code: usually not marked
- peroxide cured EPDM
- meets 21CFR 177.1550
- PTFE passed USP Class VI Cytotoxicity testing

PTFE is a material subject to plastic flow. When cycled through heat and then cooled down in process lines, PTFE gaskets will not return to the original configuration and it will continue to compress as the cycling continues. This plastic flow will allow leakage if clamp torques are not maintained.

PTFE envelope clamp gaskets with FKM filler

Size	Part Number
½"	***42MP-GR50***
¾"	***42MP-GR75***
1"	***40MP-GR100***
1½"	***40MP-GR150***
2"	***40MP-GR200***
2½"	***40MP-GR250***
3"	***40MP-GR300***
4"	***40MP-GR400***
6"	***40MP-GR600***
8"	***40MP-GR800***

Features:
- color code: usually not marked
- peroxide cured FKM
- meets 21CFR 177.1550
- PTFE passed USP Class VI Cytotoxicity testing

PTFE is a material subject to plastic flow. When cycled through heat and then cooled down in process lines, PTFE gaskets will not return to the original configuration and it will continue to compress as the cycling continues. This plastic flow will allow leakage if clamp torques are not maintained.

APC Clamp Gaskets

Buna APC clamp gaskets - *Grey*

Size	Part Number
1"	***101-H100***
1½"	***101-H150***
2"	***101-H200***
2½"	***101-H250***
3"	***101-H300***
4"	***101-H400***

Features:
- color code: no dot
- meets 21CFR 177.2600

Buna APC clamp gaskets - *Black*

Size	Part Number
1"	***101-HX100***
1½"	***101-HX150***
2"	***101-HX200***
2½"	***101-HX250***
3"	***101-HX300***
4"	***101-HX400***

Features:
- color code: no dot
- meets 21CFR 177.2600

Note: see pages 232-233 for sizing charts / refer to pages 234-236 for compatibility information

Bradford™ Pipe Fittings

A Complete Pipe Clamp Connection

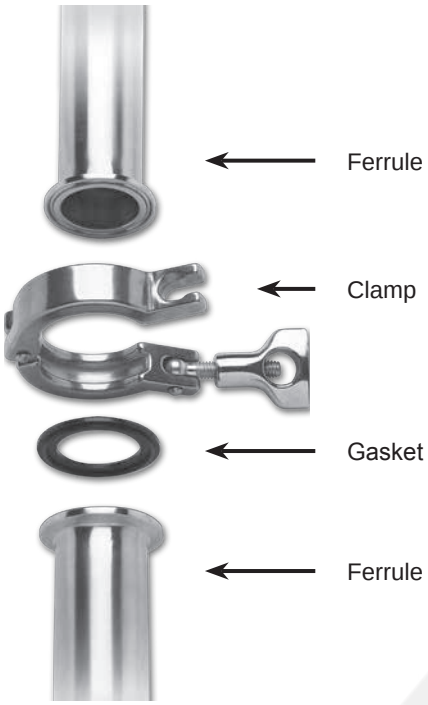

Product Specifications

Size range:
- 1" - 6" nominal pipe

Materials:
- G = 304 stainless steel
- R = 316L stainless steel
- other alloys are available

Finish:
- 3A sanitary finish ID and OD

Dimensions of Stainless Steel Pipe given in inches

Nominal Pipe Size	Outside Diameter	Nominal Wall Thickness	
		schedule 5S	schedule 10S
1"	1.32	.065	.109
1½"	1.90	.065	.109
2"	2.38	.065	.109
2½"	2.88	.083	.120
3"	3.50	.083	.120
4"	4.50	.083	.120
6"	6.62	.109	.134

This section contains pipe materials. Please note in sizes ½" through 12" pipe is known by its nominal inside diameter, which differs from its actual inside diameter. To distinguish pipe sizes from actual measured diameters as used for tube, the terms *iron pipe size* (IPS) or *nominal pipe size* (NPS) are usually used. For all pipe sizes, the outside diameter (OD) remains constant; the variations in wall thickness affect the inside diameter (ID).

Stainless steel schedule numbers from schedule 5S through schedule 80S are published in ANSI B36.19 for sizes through 12". The addition of the letter "S" after the schedule number identifies it as pertaining to stainless steel.

Pipe size and Tube OD size materials are not interchangeable

Index

Clamps 33
Ferrules 33-34
Caps 34
Adapters 35
Hangers 36
Gaskets 37

Pipe Size Clamps

Schedule 5S and 10S Single Pin Heavy Duty Clamps - *13MHHV*

Pipe Size	A	Service pressure rating @ 70°F [1]	Part Number
1"	2.122	500	***13MHHV100***
1½"	2.654	450	***13MHHV150***
2"	3.185	400	***13MHHV200***
2½"	3.717	350	***13MHHV250***
3"	4.263	250	***13MHHV300***
4"	5.263	150	***13MHHV400***
6"	7.500	100	***13MHHV600***

[1] wing nut tightened to 25 ft. lbs. of torque

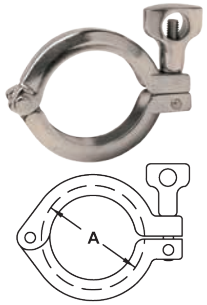

Schedule 5S and 10S Bolted Clamps - *13MHPV*

Pipe Size	A	Service pressure rating @ 70°F [1]	Part Number
1"	2.046	750	***13MHPV100***
1½"	2.578	500	***13MHPV150***
2"	3.110	500	***13MHPV200***
2½"	3.460	500	***13MHPV250***
4"	5.188	400	***13MHPV400***

[1] bronze nuts tightened to 20 ft. lbs. of torque

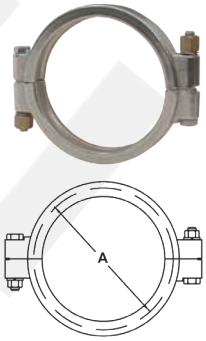

Note: see page 32 for pipe size information

Pipe Size Ferrules

Schedule 5S Short Weld Ferrules - *14WMV*

Pipe Size	A	B	C	*316L Stainless Steel* Part Number
1"	.500	1.185	1.315	***14WMV-R100***
1½"	.500	1.770	1.900	***14WMV-R150***
2"	.500	2.245	2.375	***14WMV-R200***
2½"	.500	2.709	2.875	***14WMV-R250***
3"	.500	3.334	3.500	***14WMV-R300***
4"	.625	4.334	4.500	***14WMV-R400***
6"	.875	6.407	6.625	***14WMV-R600***

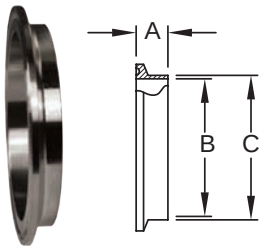

Schedule 10S Short Weld Ferrules - *14WMX*

Pipe Size	A	B	C	*316L Stainless Steel* Part Number
1"	.500	1.097	1.315	***14WMX-R100***
1½"	.500	1.682	1.900	***14WMX-R150***
2"	.500	2.157	2.375	***14WMX-R200***
2½"	.500	2.635	2.875	***14WMX-R250***
3"	.500	3.260	3.500	***14WMX-R300***
4"	.625	4.260	4.500	***14WMX-R400***
6"	.875	6.350	6.625	***14WMX-R600***

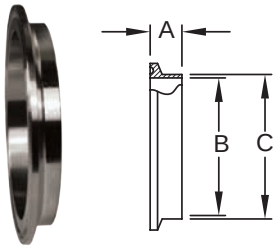

Note: see page 32 for pipe size information

Pipe Size Ferrules

Schedule 5S Long Weld Ferrules - *L14AM7V*

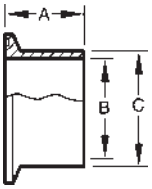

Pipe Size	A	B	C	*316L Stainless Steel* Part Number
1"	1.125	1.185	1.315	***L14AM7V-R100***
1½"	1.125	1.770	1.900	***L14AM7V-R150***
2"	1.125	2.245	2.375	***L14AM7V-R200***
2½"	1.125	2.709	2.875	***L14AM7V-R250***
3"	1.125	3.334	3.500	***L14AM7V-R300***
4"	1.125	4.334	4.500	***L14AM7V-R400***
6"	1.500	6.407	6.625	***L14AM7V-R600***

Schedule 10S Long Weld Ferrules - *L14AM7X*

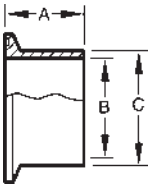

Pipe Size	A	B	C	*316L Stainless Steel* Part Number
1"	1.125	1.097	1.315	***L14AM7X-R100***
1½"	1.125	1.682	1.900	***L14AM7X-R150***
2"	1.125	2.157	2.375	***L14AM7X-R200***
2½"	1.125	2.635	2.875	***L14AM7X-R250***
3"	1.125	3.260	3.500	***L14AM7X-R300***
4"	1.125	4.260	4.500	***L14AM7X-R400***
6"	1.500	6.350	6.625	***L14AM7X-R600***

Pipe Size End Caps

Schedule 5S and 10S Solid End Caps - *16AMV*

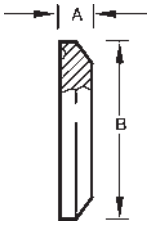

Pipe Size	A	B	*316L Stainless Steel* Part Number
1"	.250	1.984	***16AMV-R100***
1½"	.250	2.516	***16AMV-R150***
2"	.250	3.047	***16AMV-R200***
2½"	.250	3.579	***16AMV-R250***
3"	.312	4.125	***16AMV-R300***
4"	.312	5.125	***16AMV-R400***
6"	.437	7.195	***16AMV-R600***

- Specify if you are using a piping system or a tubing system when ordering.

Note: see page 32 for pipe size information

Pipe Size Adapters

Clamp x Schedule 5S Weld Adapters - *B19MPV*

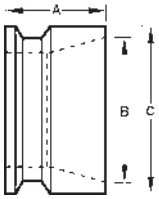

Pipe Size	A	B	C	Pipe Wall Thickness	*316L Stainless Steel* Part Number
1"	1.125	1.185	1.315	.065	***B19MPV-R100***
1½"	1.125	1.770	1.900	.065	***B19MPV-R150***
2"	1.125	2.245	2.375	.065	***B19MPV-R200***
2½"	1.125	2.709	2.875	.084	***B19MPV-R250***
3"	1.125	3.334	3.500	.084	***B19MPV-R300***
4"	1.125	4.334	4.500	.084	***B19MPV-R400***

Clamp x Schedule 10S Weld Adapters - *B19MPX*

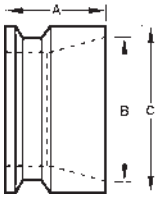

Pipe Size	A	B	C	Pipe Wall Thickness	*316L Stainless Steel* Part Number
1"	1.125	1.097	1.315	.109	***B19MPX-R100***
1½"	1.125	1.682	1.900	.109	***B19MPX-R150***
2"	1.125	2.157	2.375	.109	***B19MPX-R200***
2½"	1.125	2.635	2.875	.120	***B19MPX-R250***
3"	1.125	3.260	3.500	.120	***B19MPX-R300***
4"	1.125	4.260	4.500	.120	***B19MPX-R400***

Tube O.D. Weld x Schedule 10S Weld Adapters - *B19WX*

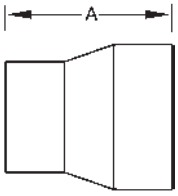

Pipe Size	A	Tube Wall Thickness	Pipe Wall Thickness	*316L Stainless Steel* Part Number
1"	2.000	.065	.109	***B19WX-R100***
1½"	2.500	.065	.109	***B19WX-R150***
2"	2.500	.065	.109	***B19WX-R200***
2½"	2.500	.065	.120	***B19WX-R250***
3"	2.500	.065	.120	***B19WX-R300***
4"	3.000	.084	.120	***B19WX-R400***

Other types of schedule 5 and 10 pipe fittings are available call Dixon Sanitary for information

B19W

Note: see page 32 for pipe size information

Pipe Size Hangers

Hex Hanger with Rubber Grommets - *B24RV**

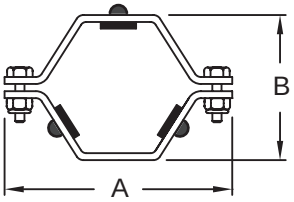

Pipe Size	A	B	*304 Stainless Steel* Part Number
1"	3.625	2.125	***B24RV-G100***
1½"	3.625	2.125	***B24RV-G150***
2"	4.312	2.625	***B24RV-G200***
2½"	4.875	3.125	***B24RV-G250***
3"	5.375	3.625	***B24RV-G300***
4"	6.562	4.750	***B24RV-G400***
6"	9.000	6.625	***B24RV-G600***

* For coupler option call Dixon Sanitary

Hex Hanger with Polypropylene Sleeves - *B24PV**

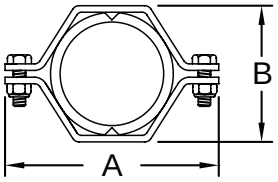

Pipe Size	A	B	*304 Stainless Steel* Part Number
1"	3.625	2.125	***B24PV-G100***
1½"	4.312	2.625	***B24PV-G150***
2"	4.875	3.125	***B24PV-G200***
2½"	4.812	3.125	***B24PV-G250***
3"	6.000	4.250	***B24PV-G300***
4"	7.500	5.625	***B24PV-G400***
6"	9.750	7.375	***B24PV-G600***

* For coupler option call Dixon Sanitary

Sleeves - *13PV*

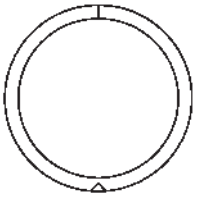

Pipe Size	*Polypropylene* Part Number
1"	***13PV-100***
1½"	***13PV-150***
2"	***13PV-200***
2½"	***13PV-250***
3"	***13PV-300***
4"	***13PV-400***
6"	***13PV-600***

Note: see page 32 for pipe size information

PRE

Schedule 5S and 10S Pipe Size Clamp Gaskets

Buna-N Pipe Size Clamp Gaskets - *Black*

Pipe Size	Part Number
1"	***40MPV-U100***
1½"	***40MPV-U150***
2"	***40MPV-U200***
2½"	***40MPV-U250***
3"	***40MPV-U300***
4"	***40MPV-U400***
6"	***40MPV-U600***

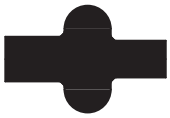

Features:
- color code: red dot
- meets 21CFR 177.2600

PTFE Pipe Size Clamp Gaskets

Pipe Size	Part Number
1"	***40MPV-G100***
1½"	***40MPV-G150***
2"	***40MPV-G200***
2½"	***40MPV-G250***
3"	***40MPV-G300***
4"	***40MPV-G400***

Features:
- color code: no dot
- meets 21CFR 177.1550
- passed U.S.P. Class VI Cytotoxicity testing
- not recommended for use with bolted clamps

PTFE is a material subject to plastic flow. When cycled through heat and then cooled down in process lines, PTFE gaskets will not return to the original configuration and it will continue to compress as the cycling continues. This plastic flow will allow leakage if clamp torques are not maintained.

Note: refer to pages 234-236 for compatibility information

Bradford™ Bevel Seat Fittings

63-03
621

C
Bevel Seat

A Complete Bevel Seat Connection

Product Specifications

Size range:
- 1" - 4" OD tube

Materials:
- G = 304 stainless steel
- R = 316L stainless steel
- other alloys are available

Finish:
- 3A sanitary finish ID and OD

Dimensions of stainless steel tube given in inches

Tube OD	Nominal Wall Thickness	Gage Number
1"	.065	16
1½"	.065	16
2"	.065	16
2½"	.065	16
3"	.065	16
4"	.083	14

Index

Nuts 39
Wrenches 39
Ferrules 40-42
Caps 43
Adapters 43
Elbows 44
Reducers 45
Miscellaneous 46
Gaskets 47-48

Bevel Seat Nuts

Union Hex Nuts - *13H*

Feature:
- **400 PSI** maximum

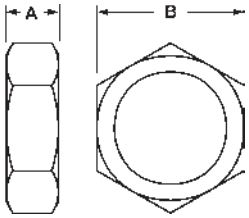

Tube OD	A	B	*304 Stainless Steel (CF8)* Part Number
1"	.906	1.812	***13H-G100***
1½"	.968	2.406	***13H-G150***
2"	1.062	3.000	***13H-G200***
2½"	1.187	3.594	***13H-G250***
3"	1.281	4.188	***13H-G300***
4"	1.500	5.438	***13H-G400***

Bevel Seat Wrenches

Single Side Hex Wrenches - *25H*

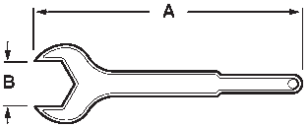

Tube OD	A	B	Weight lbs.	*Aluminum* Part Number
1"	10.500	1.812	.64	***25H-100***
1½"	12.000	2.406	.86	***25H-150***
2"	14.000	3.000	1.76	***25H-200***
2½"	16.250	3.594	2.40	***25H-250***
3"	18.500	4.188	3.04	***25H-300***
4"	19.500	5.438	3.62	***25H-400***

Two Sided Hex Wrenches - *25H*

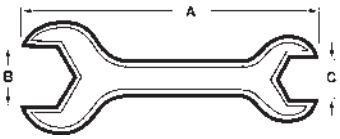

Tube OD	A	B	C	Weight lbs.	*Aluminum* Part Number
1½" x 1"	12.000	2.406	1.812	1.00	***25H-150100***
2" x 1½"	14.000	3.000	2.406	1.75	***25H-200150***
2½" x 2"	16.500	3.594	3.000	2.80	***25H-250200***
3" x 2"	18.000	4.188	3.000	3.20	***25H-300200***
3" x 2½"	18.000	4.188	3.594	3.70	***25H-300250***

Bevel Seat Ferrules

Short Plain Bevel Seat Weld Ferrules - *14PRF*

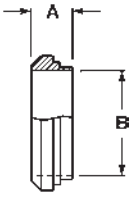

Tube OD	A	B	*304 Stainless Steel* Part Number	*316L Stainless Steel* Part Number
1"	.718	.870	***14PRF-G100***	***14PRF-R100***
1½"	.718	1.370	***14PRF-G150***	***14PRF-R150***
2"	.750	1.870	***14PRF-G200***	***14PRF-R200***
2½"	.875	2.370	***14PRF-G250***	***14PRF-R250***
3"	.906	2.870	***14PRF-G300***	***14PRF-R300***
4"	1.031	3.834	***14PRF-G400***	***14PRF-R400***

Long Plain Bevel Seat Weld Ferrules - *14A*

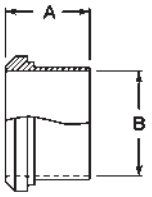

Tube OD	A	B	*304 Stainless Steel* Part Number	*316L Stainless Steel* Part Number
1"	1.375	.870	***14A-G100***	***14A-R100***
1½"	1.500	1.370	***14A-G150***	***14A-R150***
2"	1.500	1.870	***14A-G200***	***14A-R200***
2½"	1.750	2.370	***14A-G250***	***14A-R250***
3"	1.750	2.870	***14A-G300***	***14A-R300***
4"	1.750	3.834	***14A-G400***	***14A-R400***

Recessed Plain Bevel Seat Weld Ferrules - *14*

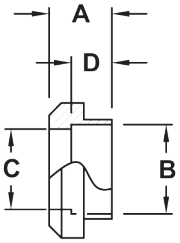

Tube OD	A	B	C	D	*304 Stainless Steel* Part Number
1"	.750	1.000	.870	.500	***14-G100***
1½"	.875	1.500	1.370	.625	***14-G150***
2"	.969	2.000	1.870	.688	***14-G200***
2½"	1.062	2.500	2.370	.750	***14-G250***
3"	1.125	3.000	2.870	.813	***14-G300***
4"	1.250	4.000	3.834	.938	***14-G400***

Recessless Plain Bevel Seat Ferrules for Expanding - *14R*

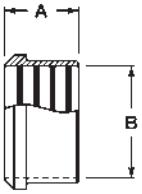

Tube OD	A	B	*304 Stainless Steel* Part Number
1"	.750	1.000	***14R-G100***
1½"	1.125	1.500	***14R-G150***
2"	1.312	2.000	***14R-G200***
2½"	1.375	2.500	***14R-G250***
3"	1.437	3.000	***14R-G300***
4"	1.500	4.000	***14R-G400***

* Meets 3-A Standard Number 63-03 when used to modify or repair existing on-site farm milk handling systems.

Bevel Seat Ferrules

Light Wall Tank Plain Bevel Seat Ferrules - *14WL*

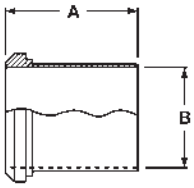

Tube OD	A	B	*304 Stainless Steel* Part Number
1"	2.000	.870	***14WL-G100***
1½"	2.250	1.370	***14WL-G150***
2"	2.500	1.870	***14WL-G200***
2½"	2.750	2.370	***14WL-G250***
3"	3.000	2.870	***14WL-G300***
4"	4.000	3.834	***14WL-G400***

Heavy Wall Tank Plain Bevel Seat Ferrules - *14W*

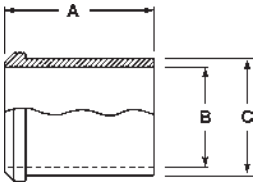

Tube OD	A	B	C	*304 Stainless Steel* Part Number
1"	2.375	.870	1.160	***14W-G100***
1½"	2.531	1.370	1.676	***14W-G150***
2"	2.781	1.870	2.192	***14W-G200***
2½"	3.062	2.370	2.708	***14W-G250***
3"	3.531	2.870	3.224	***14W-G300***
4"	4.312	3.834	4.256	***14W-G400***

Short Threaded Bevel Seat Weld Ferrules - *15TRF*

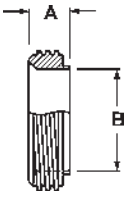

Tube OD	A	B	*304 Stainless Steel* Part Number	*316L Stainless Steel* Part Number
1"	.718	.870	***15TRF-G100***	***15TRF-R100***
1½"	.718	1.370	***15TRF-G150***	***15TRF-R150***
2"	.750	1.870	***15TRF-G200***	***15TRF-R200***
2½"	.875	2.370	***15TRF-G250***	***15TRF-R250***
3"	.906	2.870	***15TRF-G300***	***15TRF-R300***
4"	1.031	3.834	***15TRF-G400***	***15TRF-R400***

Long Threaded Bevel Seat Weld Ferrules - *15A*

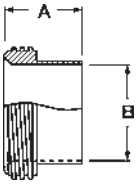

Tube OD	A	B	*304 Stainless Steel* Part Number	*316L Stainless Steel* Part Number
1"	1.375	.870	***15A-G100***	***15A-R100***
1½"	1.500	1.370	***15A-G150***	***15A-R150***
2"	1.500	1.870	***15A-G200***	***15A-R200***
2½"	1.750	2.370	***15A-G250***	***15A-R250***
3"	1.750	2.870	***15A-G300***	***15A-R300***
4"	1.750	3.834	***15A-G400***	***15A-R400***

Bevel Seat Ferrules

Recessed Threaded Bevel Seat Ferrules - *15*

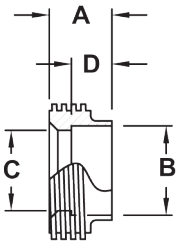

Tube OD	A	B	C	D	*304 Stainless Steel* Part Number
1"	.812	1.000	.870	.500	***15-G100***
1½"	.875	1.500	1.370	.625	***15-G150***
2"	1.031	2.000	1.870	.687	***15-G200***
2½"	1.125	2.500	2.370	.750	***15-G250***
3"	1.250	3.000	2.870	.812	***15-G300***
4"	1.375	4.000	3.834	.937	***15-G400***

3-A* Recessless Threaded Bevel Seat Ferrules for Expanding - *15R*

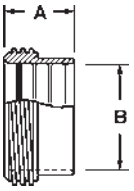

Tube OD	A	B	*304 Stainless Steel* Part Number
1"	.812	1.000	***15R-G100***
1½"	1.125	1.500	***15R-G150***
2"	1.375	2.000	***15R-G200***
2½"	1.500	2.500	***15R-G250***
3"	1.675	3.000	***15R-G300***
4"	1.675	4.000	***15R-G400***

* Meets 3-A Standard Number 63-03 when used to modify or repair existing on-site farm milk handling systems.

3-A Light Wall Tank Threaded Bevel Seat Ferrules - *15WL*

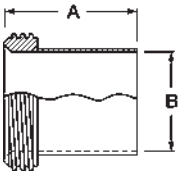

Tube OD	A	B	*304 Stainless Steel* Part Number
1"	2.000	.870	***15WL-G100***
1½"	2.250	1.370	***15WL-G150***
2"	2.500	1.870	***15WL-G200***
2½"	2.750	2.370	***15WL-G250***
3"	3.000	2.870	***15WL-G300***
4"	4.000	3.834	***15WL-G400***

3-A Heavy Wall Tank Threaded Bevel Seat Ferrules - *15W*

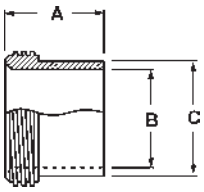

Tube OD	A	B	C	*304 Stainless Steel* Part Number	*316L Stainless Steel* Part Number
1"	1.500	.870	1.160	***15W-G100***	***15W-R100***
1½"	1.625	1.370	1.676	***15W-G150***	***15W-R150***
2"	1.750	1.870	2.192	***15W-G200***	***15W-R200***
2½"	1.750	2.370	2.708	***15W-G250***	***15W-R250***
3"	1.812	2.870	3.224	***15W-G300***	***15W-R300***
4"	2.125	3.834	4.256	***15W-G400***	***15W-R400***

Bevel Seat End Caps

Plain Bevel Seat Solid End Caps - *16A*

Tube OD	A	*304 Stainless Steel* Part Number	*316L Stainless Steel* Part Number
1"	1.312	***16A-G100***	***16A-R100***
1½"	1.843	***16A-G150***	***16A-R150***
2"	2.375	***16A-G200***	***16A-R200***
2½"	2.906	***16A-G250***	***16A-R250***
3"	3.437	***16A-G300***	***16A-R300***
4"	4.500	***16A-G400***	***16A-R400***

Bevel Seat Adapters

Plain Bevel Seat Tygon® Hose Adapters - *14AHT*

Tube OD	A	B	*304 Stainless Steel* Part Number
1"	4.688	1.000	***14AHT-G100***
1½"	4.719	1.500	***14AHT-G150***
2"	4.719	2.000	***14AHT-G200***
2½"	4.844	2.500	***14AHT-G250***
3"	4.906	3.000	***14AHT-G300***
4"	5.218	4.000	***14AHT-G400***

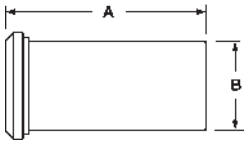

Threaded Bevel Seat Tygon® Hose Adapters - *15AHT*

Tube OD	A	B	*304 Stainless Steel* Part Number
1"	4.500	1.000	***15AHT-G100***
1½"	4.500	1.500	***15AHT-G150***
2"	4.500	2.000	***15AHT-G200***
2½"	4.500	2.500	***15AHT-G250***
3"	4.500	3.000	***15AHT-G300***
4"	5.000	4.000	***15AHT-G400***

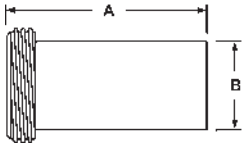

Plain Bevel Seat Rubber Hose Adapters - *14AHR*

Tube OD	A	B	C	*304 Stainless Steel* Part Number
1"	1.687	.870	1.000	***14AHR-G100***
1½"	1.687	1.370	1.500	***14AHR-G150***
2"	2.312	1.870	2.000	***14AHR-G200***
2½"	2.343	2.370	2.500	***14AHR-G250***
3"	3.500	2.870	3.000	***14AHR-G300***
4"	4.000	3.834	4.000	***14AHR-G400***

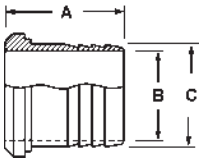

Other types of bevel seat adapters are available call Dixon Sanitary for information

15AHR

21

22

14-18

Bevel Seat Elbows

Threaded Bevel Seat x Threaded Bevel Seat 90° Elbows - *B2C*

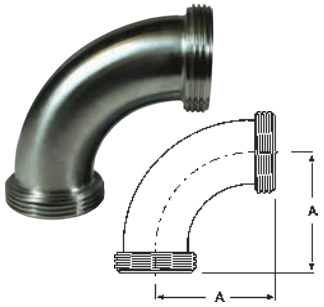

Tube OD	A	*304 Stainless Steel* Part Number
1"	2.218	***B2C-G100***
1½"	2.968	***B2C-G150***
2"	3.750	***B2C-G200***
2½"	4.625	***B2C-G250***
3"	5.406	***B2C-G300***
4"	7.031	***B2C-G400***

Threaded Bevel Seat x Plain Bevel Seat with Hex Nut 90° Elbows - *B2F*

Tube OD	A	*304 Stainless Steel* Part Number
1"	2.218	***B2F-G100***
1½"	2.968	***B2F-G150***
2"	3.750	***B2F-G200***
2½"	4.625	***B2F-G250***
3"	5.406	***B2F-G300***
4"	7.031	***B2F-G400***

Plain Bevel Seat x Plain Bevel Seat with Hex Nut 90° Elbows - *B2E*

Tube OD	A	*304 Stainless Steel* Part Number
1"	2.218	***B2E-G100***
1½"	2.968	***B2E-G150***
2"	3.750	***B2E-G200***
2½"	4.625	***B2E-G250***
3"	5.406	***B2E-G300***
4"	7.031	***B2E-G400***

Threaded Bevel Seat x Plain Bevel Seat with Hex Nut 45° Elbows - *B2P*

Tube OD	A	*304 Stainless Steel* Part Number
1"	1.343	***B2P-G100***
1½"	1.655	***B2P-G150***
2"	2.000	***B2P-G200***
2½"	2.437	***B2P-G250***
3"	2.781	***B2P-G300***
4"	3.531	***B2P-G400***

Other types of bevel seat elbows are available call Dixon Sanitary for information

B2K

Bevel Seat Reducers

Plain Bevel Seat x Threaded Bevel Seat Concentric Reducers - *B3115F*

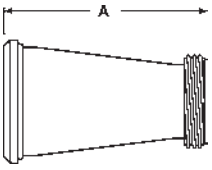

Tube OD	A	*304 Stainless Steel* Part Number
1½" x 1"	3.436	***B3115F-G150100***
2" x 1½"	3.468	***B3115F-G200150***
2½" x 2"	3.625	***B3115F-G250200***
3" x 2"	5.656	***B3115F-G300200***
3" x 2½"	3.781	***B3115F-G300250***
4" x 3"	5.937	***B3115F-G400300***

Threaded Bevel Seat x Threaded Bevel Seat Concentric Reducers - *B31TT*

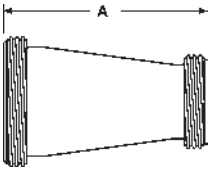

Tube OD	A	*304 Stainless Steel* Part Number
1½" x 1"	3.436	***B31TT-G150100***
2" x 1½"	3.468	***B31TT-G200150***
2½" x 2"	3.625	***B31TT-G250200***
3" x 2"	5.656	***B31TT-G300200***
3" x 2½"	3.781	***B31TT-G300250***
4" x 3"	5.937	***B31TT-G400300***

Threaded Bevel Seat x Plain Bevel Seat with Hex Nut Concentric Reducers - *B31TP*

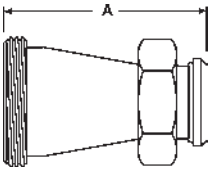

Tube OD	A	*304 Stainless Steel* Part Number
1½" x 1"	3.436	***B31TP-G150100***
2" x 1½"	3.468	***B31TP-G200150***
2½" x 2"	3.625	***B31TP-G250200***
3" x 2"	5.656	***B31TP-G300200***
3" x 2½"	3.781	***B31TP-G300250***
4" x 3"	5.937	***B31TP-G400300***

Other types of bevel seat reducers are available call Dixon Sanitary for information

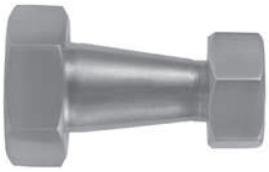

B3114F

B3215F

B3214F

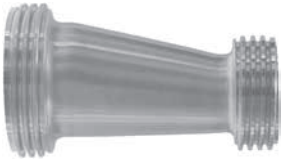

B32-TT

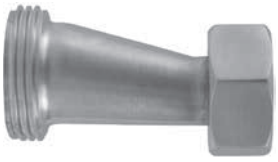

B32-TP

Miscellaneous Bevel Seat Configurations

Other types of bevel seat configurations are available call Dixon Sanitary for information

B7

B7A

B7B

B9

B9A

B28A

B28B

Bevel Seat Gaskets

Buna-N Bevel Seat Gaskets - *Black*

Size	Part Number
1"	***40BS-O100***
1½"	***40BS-O150***
2"	***40BS-O200***
2½"	***40BS-O250***
3"	***40BS-O300***
4"	***40BS-O400***

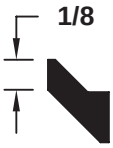

Features:
- color code: red dot
- meets 21CFR 177.2600

Buna-N Flat Bevel Seat Gaskets - *Black*

Size	Part Number
1"	***40BS-F100***
1½"	***40BS-F150***
2"	***40BS-F200***
2½"	***40BS-F250***
3"	***40BS-F300***
4"	***40BS-F400***

Feature:
- color code: red dot

EPDM Bevel Seat Gaskets - *Black*

Size	Part Number
1"	***40BS-E100***
1½"	***40BS-E150***
2"	***40BS-E200***
2½"	***40BS-E250***
3"	***40BS-E300***
4"	***40BS-E400***

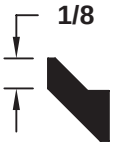

Features:
- color code: three green dots
- peroxide cured
- meets 21CFR 177.2600
- passed U.S.P. Class VI Cytotoxicity testing

FKM Bevel Seat Gaskets - *Black*

Size	Part Number
1"	***40BS-Y100***
1½"	***40BS-Y150***
2"	***40BS-Y200***
2½"	***40BS-Y250***
3"	***40BS-Y300***
4"	***40BS-Y400***

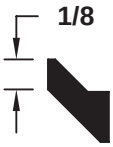

Features:
- color code: one white dot and one yellow dot
- peroxide cured
- meets 21CFR 177.2600
- passed U.S.P. Class VI Cytotoxicity testing

Note: refer to pages 234-236 for compatibility information

Bevel Seat Gaskets

Silicone Bevel Seat Gaskets - *White*

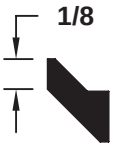

Features:
- color code: no dot
- peroxide cured
- meets 21CFR 177.2600
- passed U.S.P. Class VI Cytotoxicity testing

Size	Part Number
1"	***40BS-X100***
1½"	***40BS-X150***
2"	***40BS-X200***
2½"	***40BS-X250***
3"	***40BS-X300***
4"	***40BS-X400***

PTFE Bevel Seat Gaskets - *White*

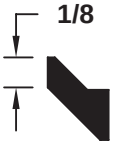

Features:
- color code: no dot
- meets 21CFR 177.1550
- passed U.S.P. Class VI Cytotoxicity testing

Size	Part Number
1"	***40BS-S100***
1½"	***40BS-S150***
2"	***40BS-S200***
2½"	***40BS-S250***
3"	***40BS-S300***
4"	***40BS-S400***

PTFE is a material subject to plastic flow. When cycled through heat and then cooled down in process lines, PTFE gaskets will not return to the original configuration and it will continue to compress as the cycling continues. This plastic flow will allow leakage if clamp torques are not maintained.

Heavy PTFE Bevel Seat Gaskets - *White*

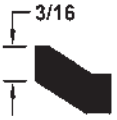

Features:
- color code: no dot
- meets 21CFR 177.1550
- passed U.S.P. Class VI Cytotoxicity testing

Size	Part Number
1"	***40BS-H100***
1½"	***40BS-H150***
2"	***40BS-H200***
2½"	***40BS-H250***
3"	***40BS-H300***
4"	***40BS-H400***

PTFE is a material subject to plastic flow. When cycled through heat and then cooled down in process lines, PTFE gaskets will not return to the original configuration and it will continue to compress as the cycling continues. This plastic flow will allow leakage if clamp torques are not maintained.

Note: refer to pages 234-236 for compatibility information

Bradford™ John Perry Fittings

63-03
621

A Complete John Perry Connection

Hex Nut

Plain Ferrule

Gasket

Threaded Ferrule

Product Specifications

Size range:
- 1" - 4" OD tube

Materials:
- G = 304 stainless steel
- R = 316L stainless steel
- other alloys are available

Finish:
- 3A sanitary finish ID and OD

Dimensions of stainless steel tube given in inches

Tube OD	Nominal Wall Thickness	Gage Number
1"	.065	16
1½"	.065	16
2"	.065	16
2½"	.065	16
3"	.065	16
4"	.083	14

Index

Nuts 50
Wrenches 50
Ferrules 51
Caps 52
Miscellaneous 52
Gaskets 53

John Perry Nuts

Union Hex Nuts - *13H*

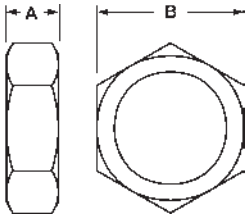

Feature:
- **400 PSI** maximum

Tube OD	A	B	*304 Stainless Steel (CF8)* Part Number
1"	.906	1.812	***13H-G100***
1½"	.968	2.406	***13H-G150***
2"	1.062	3.000	***13H-G200***
2½"	1.187	3.594	***13H-G250***
3"	1.281	4.188	***13H-G300***
4"	1.500	5.438	***13H-G400***

John Perry Wrenches

Single Side Hex Wrenches - *25H*

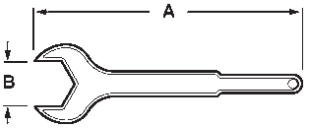

Tube OD	A	B	Weight lbs.	*Aluminum* Part Number
1"	10.500	1.812	.64	***25H-100***
1½"	12.000	2.406	.86	***25H-150***
2"	14.000	3.000	1.76	***25H-200***
2½"	16.250	3.594	2.40	***25H-250***
3"	18.500	4.188	3.04	***25H-300***
4"	19.500	5.438	3.62	***25H-400***

Two Sided Hex Wrenches - *25H*

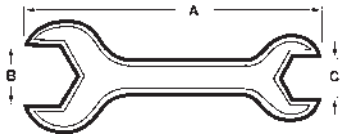

Tube OD	A	B	C	Weight lbs.	*Aluminum* Part Number
1½" x 1"	12.000	2.406	1.812	1.00	***25H-150100***
2" x 1½"	14.000	3.000	2.406	1.75	***25H-200150***
2½" x 2"	16.500	3.594	3.000	2.80	***25H-250200***
3" x 2"	18.000	4.188	3.000	3.20	***25H-300200***
3" x 2½"	18.000	4.188	3.594	3.70	***25H-300250***

John Perry Ferrules

John Perry Short Plain Weld Ferrules - *14PRFJP*

Tube OD	A	B	*304 Stainless Steel* Part Number	*316L Stainless Steel* Part Number
1"	.719	.870	***14PRFJP-G100***	***14PRFJP-R100***
1½"	.719	1.370	***14PRFJP-G150***	***14PRFJP-R150***
2"	.750	1.870	***14PRFJP-G200***	***14PRFJP-R200***
2½"	.875	2.370	***14PRFJP-G250***	***14PRFJP-R250***
3"	.906	2.870	***14PRFJP-G300***	***14PRFJP-R300***
4"	1.031	3.834	***14PRFJP-G400***	***14PRFJP-R400***

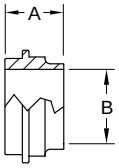

John Perry Long Plain Weld Ferrules - *L14AJP*

Tube OD	A	B	*304 Stainless Steel* Part Number	*316L Stainless Steel* Part Number
1"	1.375	.870	***L14AJP-G100***	***L14AJP-R100***
1½"	1.500	1.370	***L14AJP-G150***	***L14AJP-R150***
2"	1.500	1.870	***L14AJP-G200***	***L14AJP-R200***
2½"	1.750	2.370	***L14AJP-G250***	***L14AJP-R250***
3"	1.750	2.870	***L14AJP-G300***	***L14AJP-R300***
4"	1.750	3.834	***L14AJP-G400***	***L14AJP-R400***

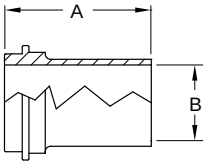

John Perry Threaded Short Weld Ferrules - *15TRFJP*

Tube OD	A	B	*304 Stainless Steel* Part Number	*316L Stainless Steel* Part Number
1"	.719	.870	***15TRFJP-G100***	***15TRFJP-R100***
1½"	.719	1.370	***15TRFJP-G150***	***15TRFJP-R150***
2"	.750	1.870	***15TRFJP-G200***	***15TRFJP-R200***
2½"	.875	2.370	***15TRFJP-G250***	***15TRFJP-R250***
3"	.906	2.870	***15TRFJP-G300***	***15TRFJP-R300***
4"	1.031	3.834	***15TRFJP-G400***	***15TRFJP-R400***

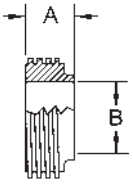

John Perry Threaded Long Weld Ferrules - *L15AJP*

Tube OD	A	B	*304 Stainless Steel* Part Number	*316L Stainless Steel* Part Number
1"	1.375	.870	***L15AJP-G100***	***L15AJP-R100***
1½"	1.500	1.370	***L15AJP-G150***	***L15AJP-R150***
2"	1.500	1.870	***L15AJP-G200***	***L15AJP-R200***
2½"	1.750	2.370	***L15AJP-G250***	***L15AJP-R250***
3"	1.750	2.870	***L15AJP-G300***	***L15AJP-R300***
4"	1.750	3.834	***L15AJP-G400***	***L15AJP-R400***

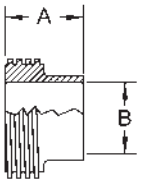

John Perry End Caps

John Perry Solid End Caps - *16AJP*

Tube OD	A	*304 Stainless Steel* Part Number	*316L Stainless Steel* Part Number
1"	1.125	***16AJP-G100***	***16AJP-R100***
1½"	1.656	***16AJP-G150***	***16AJP-R150***
2"	2.187	***16AJP-G200***	***16AJP-R200***
2½"	2.656	***16AJP-G250***	***16AJP-R250***
3"	3.187	***16AJP-G300***	***16AJP-R300***
4"	4.187	***16AJP-G400***	***16AJP-R400***

Miscellaneous John **Perry Configurations**

Other types of John Perry configurations are available call Dixon Sanitary for information

B2CJP

B2PJP

B2EJP

B7JP

B3115FJP

B3114FJP

B31TPJP

B7AJP

B3215FJP

B3214FJP

B32TPJP

B9JP

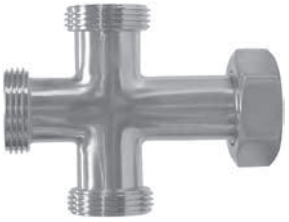
B9AJP

B28BJP

B28AJP

John Perry Gaskets

Buna 80 Duro John Perry Gaskets

Size	Part Number
1"	***40JP-U100***
1½"	***40JP-U150***
2"	***40JP-U200***
2½"	***40JP-U250***
3"	***40JP-U300***
4"	***40JP-U400***

Features:
- color code: one red dot
- meets 21CFR 177.2600

EPDM John Perry Gaskets

Size	Part Number
1"	***40JP-E100***
1½"	***40JP-E150***
2"	***40JP-E200***
2½"	***40JP-E250***
3"	***40JP-E300***
4"	***40JP-E400***

Features:
- color code: three green dots
- peroxide cured
- meets 21CFR 177.2600
- passed U.S.P. Class VI Cytotoxicity testing

FKM John Perry Gaskets

Size	Part Number
1"	***40JP-SFY100***
1½"	***40JP-SFY150***
2"	***40JP-SFY200***
2½"	***40JP-SFY250***
3"	***40JP-SFY300***
4"	***40JP-SFY400***

Features:
- color code: one white dot and one yellow dot
- peroxide cured
- meets 21CFR 177.2600
- passed U.S.P. Class VI Cytotoxicity testing

Virgin PTFE John Perry Gaskets

Size	Part Number
1"	***40JP-G100***
1½"	***40JP-G150***
2"	***40JP-G200***
2½"	***40JP-G250***
3"	***40JP-G300***
4"	***40JP-G400***

Features:
- color code: no dot
- meets 21CFR 177.1550
- passed U.S.P. Class VI Cytotoxicity testing

PTFE is a material subject to plastic flow. When cycled through heat and then cooled down in process lines, PTFE gaskets will not return to the original configuration and it will continue to compress as the cycling continues. This plastic flow will allow leakage if clamp torques are not maintained.

Note: refer to pages 234-236 for compatibility information

A3 63-03
621

Bradford™ I-line & Q-line Fittings

A Complete I-line Connection

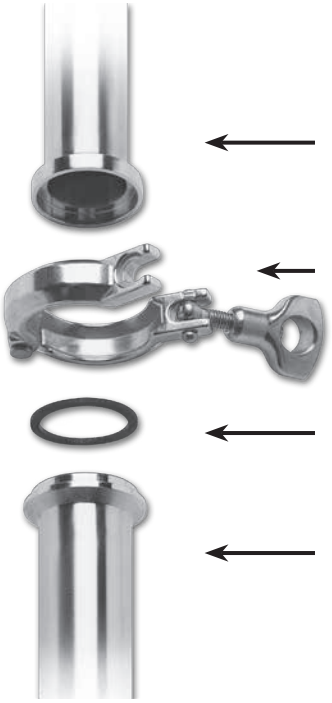

Product Specifications

Size range:
- 1" - 8" OD tube I-line*
- 1" - 4" OD tube Q-line

*stock items to 4", 6" & 8" items are special order

Materials:
- G = 304 stainless steel
- R = 316L stainless steel
- other alloys are available

Finish:
- 3A sanitary finish ID and OD

Dimensions of stainless steel tube given in inches

Tube OD	Nominal Wall Thickness	Gauge Number
1"	.065	16
1-1/2"	.065	16
2"	.065	16
2-1/2"	.065	16
3"	.065	16
4"	.083	14
6"	.109	12
8"	.120	10

Index

Clamps: I-line & Q-line 55
I-line Ferrules 56-57
Q-line Ferrules 58
Caps I-line & Q-line 58
I-line Adapters 59
I-line Elbows 60
Miscellaneous 61
I-line Gaskets 62-63
Q-line Gaskets 63

I-line/Q-line Clamps

Heavy Duty Clamps - *13ILH*

- Q-line service pressure rating for all sizes: 150 PSI @ 70°F and 125 PSI @ 250°F

Tube OD	Service Pressure Rating @ 70°F [1]	Service Pressure Rating @ 250°F [1]	A	Part Number
1"- 1½"	700	250	2.122	***13ILH100-150***
2"	450	250	2.654	***13ILH200***
2½"	450	200	3.185	***13ILH250***
3"	350	150	3.717	***13ILH300***
4"	200	125	4.820	***13ILH400***
6"	150	100	7.689	***13ILH600***
8"	125	75	9.689	***13ILH800***

[1] wing nut tightened to 25 in. lb. of torque

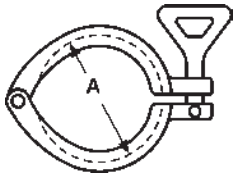

Bolted Clamps - *13ILB*

Tube OD	Service Pressure Rating @ 70°F [1]	Service Pressure Rating @ 250°F [1]	A	Part Number
1"- 1½"	1220	1100	2.122	***13ILB100-150***
2"	900	830	2.654	***13ILB200***
2½"	720	660	3.185	***13ILB250***
3"	600	550	3.717	***13ILB300***
4"	570	525	4.820	***13ILB400***

[1] nut tightened to 20 ft. lb. of torque

1" - 4"

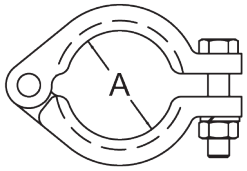

Tube OD	Service Pressure Rating @ 70°F [1]	Service Pressure Rating @ 250°F [1]	A	Part Number
6"	300	200	7.689	***13ILB600***
8"	250	150	9.689	***13ILB800***

[1] nut tightened to 20 ft. lb. of torque

1" - 4"

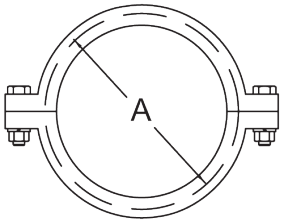

Squeeze Clamps - *13IL-Q*

Tube OD	Service Pressure Rating @ 70°F [1]	Service Pressure Rating @ 250°F [1]	A	Part Number
1"- 1½"	700	250	2.122	***13IL-Q100150***
2"	450	250	2.654	***13IL-Q200***

[1] wing nut tightened to 25 in. lb. of torque

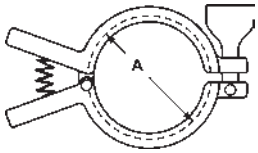

I-line/Q-line Ferrules

Male I-Line Short Weld Ferrules - *14WI*

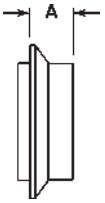

Tube OD	A	*304 Stainless Steel* Part Number	*316L Stainless Steel* Part Number
1"	.600	***14WI-G100***	***14WI-R100***
1½"	.765	***14WI-G150***	***14WI-R150***
2"	.790	***14WI-G200***	***14WI-R200***
2½"	.848	***14WI-G250***	***14WI-R250***
3"	.906	***14WI-G300***	***14WI-R300***
4"	1.031	***14WI-G400***	***14WI-R400***
6"	.940	***---***	***14WI-R600***
8"	.940	***---***	***14WI-R800***

Male I-Line Long Weld Ferrules - *14WLI*

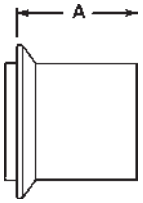

Tube OD	A	*304 Stainless Steel* Part Number	*316L Stainless Steel* Part Number
1"	1.562	***14WLI-G100***	***14WLI-R100***
1½"	1.843	***14WLI-G150***	***14WLI-R150***
2"	2.062	***14WLI-G200***	***14WLI-R200***
2½"	2.188	***14WLI-G250***	***14WLI-R250***
3"	2.375	***14WLI-G300***	***14WLI-R300***
4"	2.688	***14WLI-G400***	***14WLI-R400***
6"	2.688	***---***	***14WLI-R600***

Male I-Line Heavy Wall Tank Weld Ferrules - *14WHI*

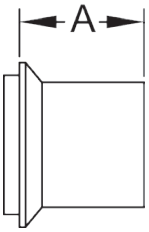

Tube OD	A	*304 Stainless Steel* Part Number	*316L Stainless Steel* Part Number
1"	1.312	***14WHI-G100***	***14WHI-R100***
1½"	1.457	***14WHI-G150***	***14WHI-R150***
2"	1.500	***14WHI-G200***	***14WHI-R200***
2½"	1.437	***14WHI-G250***	***14WHI-R250***
3"	1.500	***14WHI-G300***	***14WHI-R300***
4"	1.812	***14WHI-G400***	***14WHI-R400***

I-line/Q-line Ferrules

Female I-Line Short Weld Ferrules - *15WI*

Tube OD	A	*304 Stainless Steel* Part Number	*316L Stainless Steel* Part Number
1"	.785	***15WI-G100***	***15WI-R100***
1½"	.950	***15WI-G150***	***15WI-R150***
2"	1.040	***15WI-G200***	***15WI-R200***
2½"	1.160	***15WI-G250***	***15WI-R250***
3"	1.220	***15WI-G300***	***15WI-R300***
4"	1.350	***15WI-G400***	***15WI-R400***
6"	1.125	---	***15WI-R600***
8"	1.125	---	***15WI-R800***

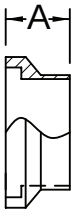

Female I-Line Long Weld Ferrules - *15WLI*

Tube OD	A	*304 Stainless Steel* Part Number	*316L Stainless Steel* Part Number
1"	1.750	***15WLI-G100***	***15WLI-R100***
1½"	2.031	***15WLI-G150***	***15WLI-R150***
2"	2.312	***15WLI-G200***	***15WLI-R200***
2½"	2.500	***15WLI-G250***	***15WLI-R250***
3"	2.688	***15WLI-G300***	***15WLI-R300***
4"	3.000	***15WLI-G400***	***15WLI-R400***
6"	3.000	---	***15WLI-R600***

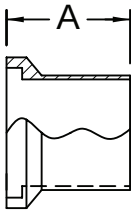

Female I-Line Heavy Wall Tank Weld Ferrules - *15WHI*

Tube OD	A	*304 Stainless Steel* Part Number	*316L Stainless Steel* Part Number
1"	1.500	***15WHI-G100***	***15WHI-R100***
1½"	1.625	***15WHI-G150***	***15WHI-R150***
2"	1.750	***15WHI-G200***	***15WHI-R200***
2½"	1.750	***15WHI-G250***	***15WHI-R250***
3"	1.812	***15WHI-G300***	***15WHI-R300***
4"	2.125	***15WHI-G400***	***15WHI-R400***

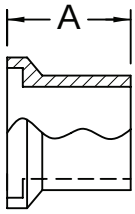

I-line/Q-line Ferrules

Q-line Weld Ferrules - *14WQ*

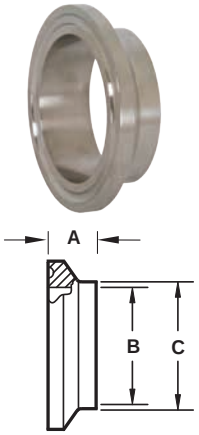

Tube OD	A	B	C	*304 Stainless Steel* Part Number
1"	.531	.870	1.000	***14WQ-G100***
1½"	.563	1.370	1.500	***14WQ-G150***
2"	.813	1.870	2.000	***14WQ-G200***
2½"	.938	2.370	2.500	***14WQ-G250***
3"	.938	2.870	3.000	***14WQ-G300***
4"	1.000	3.834	4.000	***14WQ-G400***

I-line/Q-line End Caps

Male I-Line Solid End Caps - *16AI-14I*

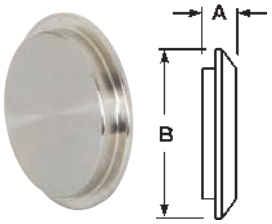

Tube OD	A	B	*304 Stainless Steel* Part Number	*316L Stainless Steel* Part Number
1"	.500	1.985	***16AI-14I100***	***16AI-14I100R***
1½"	.500	1.985	***16AI-14I150***	***16AI-14I150R***
2"	.562	2.640	***16AI-14I200***	***16AI-14I200R***
2½"	.750	3.307	***16AI-14I250***	***16AI-14I250R***
3"	.750	3.870	***16AI-14I300***	***16AI-14I300R***
4"	.750	4.870	***16AI-14I400***	***16AI-14I400R***
6"	.750	7.495	***16AI-14I600***	***16AI-14I600R***
8"	.880	9.495	---	***16AI-14I800R***

Female I-Line Solid End Caps - *16AI-15I*

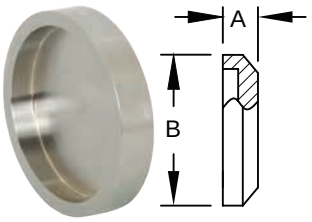

Tube OD	A	B	*304 Stainless Steel* Part Number	*316L Stainless Steel* Part Number
1"	.500	1.985	***16AI-15I100***	***16AI-15I100R***
1½"	.500	1.985	***16AI-15I150***	***16AI-15I150R***
2"	.562	2.640	***16AI-15I200***	***16AI-15I200R***
2½"	.750	3.307	***16AI-15I250***	***16AI-15I250R***
3"	.750	3.870	***16AI-15I300***	***16AI-15I300R***
4"	.750	4.870	***16AI-15I400***	***16AI-15I400R***
6"	.750	7.495	***16AI-15I600***	***16AI-15I600R***
8"	.880	9.495	---	***16AI-15I800R***

Q-Line Solid End Caps - *16AQ*

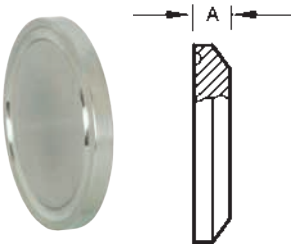

Tube OD	A	*304 Stainless Steel* Part Number
1"	.313	***16AQ-G100***
1½"	.313	***16AQ-G150***
2"	.438	***16AQ-G200***
2½"	.500	***16AQ-G250***
3"	.500	***16AQ-G300***
4"	.625	***16AQ-G400***

I-line/Q-line Adapters

Male I-Line x Clamp Adapters - *17-14I-14MP*

Tube OD	A	*304 Stainless Steel* Part Number
1"	1.093	***17-14I-14MPG100***
1½"	1.265	***17-14I-14MPG150***
2"	1.290	***17-14I-14MPG200***
2½"	1.312	***17-14I-14MPG250***
3"	1.406	***17-14I-14MPG300***
4"	1.656	***17-14I-14MPG400***

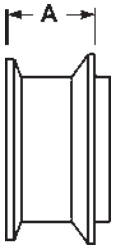

Female I-Line x Clamp Adapters - *17-15I-14MP*

Tube OD	A	*304 Stainless Steel* Part Number
1"	1.281	***17-15I-14MPG100***
1½"	1.450	***17-15I-14MPG150***
2"	1.540	***17-15I-14MPG200***
2½"	1.625	***17-15I-14MPG250***
3"	1.718	***17-15I-14MPG300***
4"	1.968	***17-15I-14MPG400***

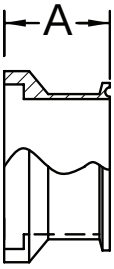

Other types of I-line adapters are available call Dixon Sanitary for information

17-14I-15

17-14I-14

17-14I-14I

14HRI

17-15I-15

17-15I-14

17-15I-15I

15HRI

17-14I-15I

I-line/Q-line Elbows

90° Female I-Line x Male I-Line Elbows - *B2FI*

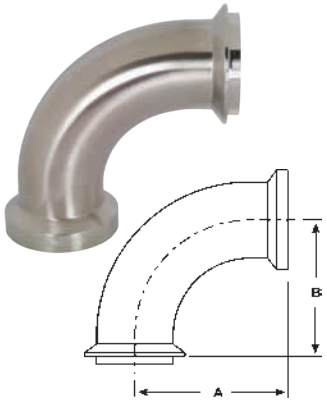

Tube OD	A	B	*304 Stainless Steel* Part Number
1"	2.281	2.093	***B2FI-G100***
1½"	3.188	3.000	***B2FI-G150***
2"	4.031	3.781	***B2FI-G200***
2½"	4.906	4.593	***B2FI-G250***
3"	5.718	5.406	***B2FI-G300***
4"	7.344	7.031	***B2FI-G400***

90° Female I-Line Elbows - *B2CI*

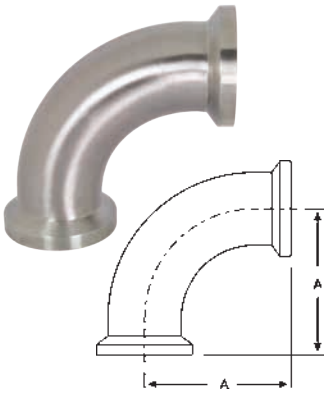

Tube OD	A	*304 Stainless Steel* Part Number
1"	2.281	***B2CI-G100***
1½"	3.188	***B2CI-G150***
2"	4.031	***B2CI-G200***
2½"	4.906	***B2CI-G250***
3"	5.718	***B2CI-G300***
4"	7.344	***B2CI-G400***

90° Male I-Line Elbows - *B2EI*

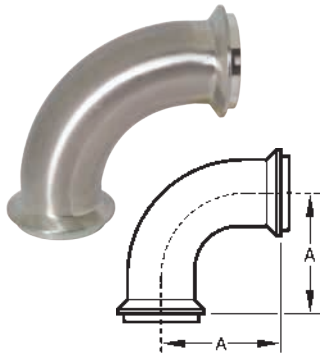

Tube OD	A	*304 Stainless Steel* Part Number
1"	2.093	***B2EI-G100***
1½"	3.000	***B2EI-G150***
2"	3.781	***B2EI-G200***
2½"	4.593	***B2EI-G250***
3"	5.406	***B2EI-G300***
4"	7.031	***B2EI-G400***

Other types of I-line elbows are available call Dixon Sanitary for information

B2HI

B2PI

B2KI

Miscellaneous I-line/Q-line Configurations

Other types of I-line configurations are available call Dixon Sanitary for information

28BI

28AI

B9I

B7HI

B7I

B7EI

B7AI

B7BI

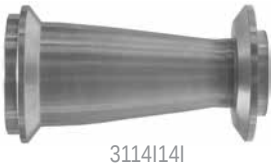
3114I14I

3114I15I

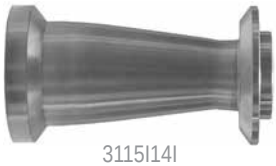
3115I14I

3115I15I

3214I14I

3214I15I

32I15I14I

3215I15I

I-line Gaskets

Buna-N I-Line Gaskets - *Black* 3/32"

Features:
- color code: red dot
- meets 21CFR 177.2600

Size	Part Number
1"	***40IH100***
1½"	***40IH150***
2"	***40IH200***
2½"	***40IH250***
3"	***40IH300***
4"	***40IH400***
6"	***40IH600***
8"	***40IH800***

EPDM I-Line Gaskets - *White* 3/32"

Features:
- color code: three green dots
- peroxide cured
- meets 21CFR 177.2600
- passed U.S.P. Class VI Cytotoxicity testing

Size	Part Number
1"	***40IE100***
1½"	***40IE150***
2"	***40IE200***
2½"	***40IE250***
3"	***40IE300***
4"	***40IE400***
6"	***40IE600***
8"	***40IE800***

EPDM I-Line Gaskets - *White* 1/16"

Features:
- color code: three green dots
- peroxide cured
- meets 21CFR 177.2600
- passed U.S.P. Class VI Cytotoxicity testing

Size	Part Number
1"	***40IE10016***
1½"	***40IE15016***
2"	***40IE20016***
2½"	***40IE25016***
3"	***40IE30016***
4"	***40IE40016***
6"	***40IE60016***
8"	***40IE80016***

FKM I-Line Gaskets - 1/16"

Features:
- color code: one white dot and one yellow dot
- peroxide cured
- meets 21CFR 177.1550
- passed U.S.P. Class VI Cytotoxicity testing

Size	Part Number
1"	***40IV100***
1½"	***40IV150***
2"	***40IV200***
2½"	***40IV250***
3"	***40IV300***
4"	***40IV400***
6"	***40IV600***
8"	***40IV800***

Note: refer to pages 234-236 for compatibility information

I-line Gaskets

PTFE I-Line Gaskets - 1/16"

Size	Part Number
1"	***40IT100***
1½"	***40IT150***
2"	***40IT200***
2½"	***40IT250***
3"	***40IT300***
4"	***40IT400***
6"	***40IT600***
8"	***40IT800***

Features:
- color code: no dot
- meets 21CFR 177.1550
- passed U.S.P. Class VI Cytotoxicity testing

PTFE is a material subject to plastic flow. When cycled through heat and then cooled down in process lines, PTFE gaskets will not return to the original configuration and it will continue to compress as the cycling continues. This plastic flow will allow leakage if clamp torques are not maintained.

Q-line Gaskets

Buna-N Q-Line Gaskets - *Black*

Size	Part Number
1"	***40QH100***
1½"	***40QH150***
2"	***40QH200***
2½"	***40QH250***
3"	***40QH300***
4"	***40QH400***

Features:
- color code: red dot
- meets 21CFR 177.2600

PTFE Q-Line Gaskets - *White*

Size	Part Number
1"	***40QT100***
1½"	***40QT150***
2"	***40QT200***
2½"	***40QT250***
3"	***40QT300***
4"	***40QT400***

Features:
- color code: no dot
- meets 21CFR 177.1550
- passed U.S.P. Class VI Cytotoxicity testing

PTFE is a material subject to plastic flow. When cycled through heat and then cooled down in process lines, PTFE gaskets will not return to the original configuration and it will continue to compress as the cycling continues. This plastic flow will allow leakage if clamp torques are not maintained.

Note: refer to pages 234-236 for compatibility information

3A 63-03
621

Bradford™ Polished Weld Fittings

A Complete Weld Connection

Weld end

Weld end

Product Specifications

Size range:
- ½" - 12" OD tube

Materials:
- G = 304 stainless steel
- R = 316L stainless steel
- other alloys are available

Finish:
- 3A sanitary finish ID and OD
- #3, #5 and electropolish finishes are available

Dimensions of stainless steel tube given in inches

Tube OD	Nominal Wall Thickness	Gage Number
½"	.065	16
¾"	.065	16
1"	.065	16
1½"	.065	16
2"	.065	16
2½"	.065	16
3"	.065	16
4"	.083	14
6"	.109	12
8"	.120	10
10"	.109	12
12"	.120	10

Index

Elbows 65-67
Sweep Elbows 67
Tees 68-69
Adapters 70
Reducers 70-71
Miscellaneous 72-73

Weld Elbows

Polished 90° Weld Elbows with Tangents - *B2S*

Tube OD	A	Nominal Wall	*304 Stainless Steel* Part Number	*316L Stainless Steel* Part Number
½"	3.000	.065	---	**B2S-R50P**
¾"	3.000	.065	---	**B2S-R75P**
1"	2.062	.065	**B2S-G100P**	**B2S-R100P**
1½"	2.937	.065	**B2S-G150P**	**B2S-R150P**
2"	4.062	.065	**B2S-G200P**	**B2S-R200P**
2½"	5.187	.065	**B2S-G250P**	**B2S-R250P**
3"	6.312	.065	**B2S-G300P**	**B2S-R300P**
4"	8.312	.083	**B2S-G400P**	**B2S-R400P**

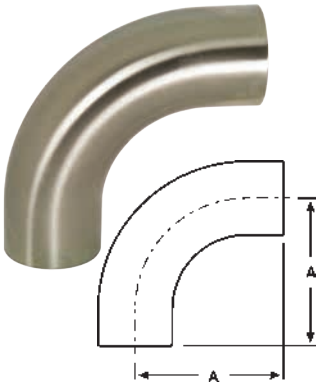

Polished 90° Weld Elbows - *B2WCL*

Tube OD	A	Nominal Wall	*304 Stainless Steel* Part Number	*316L Stainless Steel* Part Number
½"	1.125	.065	---	**B2WCL-R50P**
¾"	1.125	.065	---	**B2WCL-R75P**
1"	1.500	.065	**B2WCL-G100P**	**B2WCL-R100P**
1½"	2.250	.065	**B2WCL-G150P**	**B2WCL-R150P**
2"	3.000	.065	**B2WCL-G200P**	**B2WCL-R200P**
2½"	3.750	.065	**B2WCL-G250P**	**B2WCL-R250P**
3"	4.500	.065	**B2WCL-G300P**	**B2WCL-R300P**
4"	6.000	.083	**B2WCL-G400P**	**B2WCL-R400P**
6"	9.000	.109	**B2WCL-G600P**	**B2WCL-R600P**
8"	12.000	.120	**B2WCL-G800P**	**B2WCL-R800P**
10"	15.000	.109	**B2WCL-G1000P**	**B2WCL-R1000P**

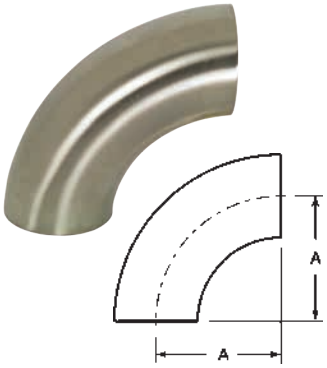

Polished 45° Weld Elbows with Tangents - *B2KS*

Tube OD	A	Nominal Wall	*304 Stainless Steel* Part Number	*316L Stainless Steel* Part Number
½"	2.250	.065	---	**B2KS-R50P**
¾"	2.250	.065	---	**B2KS-R75P**
1"	1.188	.065	**B2KS-G100P**	**B2KS-R100P**
1½"	1.625	.065	**B2KS-G150P**	**B2KS-R150P**
2"	2.312	.065	**B2KS-G200P**	**B2KS-R200P**
2½"	3.000	.065	**B2KS-G250P**	**B2KS-R250P**
3"	3.688	.065	**B2KS-G300P**	**B2KS-R300P**
4"	4.812	.083	**B2KS-G400P**	**B2KS-R400P**

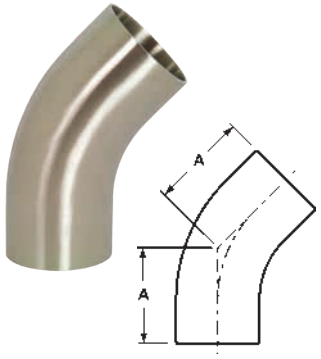

Polished 45° Weld Elbows - *B2WK*

Tube OD	A	R	Nominal Wall	*304 Stainless Steel* Part Number	*316L Stainless Steel* Part Number
½"	.466	1.125	.065	---	**B2WK-R50P**
¾"	.466	1.125	.065	---	**B2WK-R75P**
1"	.625	1.500	.065	**B2WK-G100P**	**B2WK-R100P**
1½"	.937	2.250	.065	**B2WK-G150P**	**B2WK-R150P**
2"	1.250	3.000	.065	**B2WK-G200P**	**B2WK-R200P**
2½"	1.562	3.750	.065	**B2WK-G250P**	**B2WK-R250P**
3"	1.875	4.500	.065	**B2WK-G300P**	**B2WK-R300P**
4"	2.500	6.000	.083	**B2WK-G400P**	**B2WK-R400P**
6"	3.750	9.000	.109	**B2WK-G600P**	**B2WK-R600P**
8"	5.000	12.000	.120	**B2WK-G800P**	**B2WK-R800P**
10"	6.250	15.000	.109	**B2WK-G1000P**	**B2WK-R1000P**
12"	7.500	18.000	.120	**B2WK-G1200P**	**B2WK-R1200P**

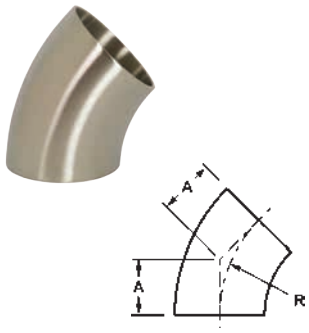

Weld Elbows

Polished 90° Clamp x Weld Elbows - *B2CM*

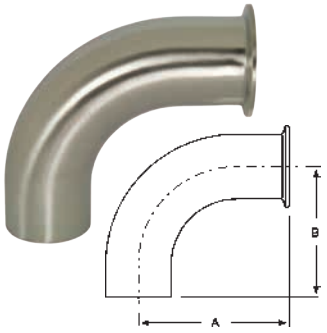

Tube OD	A	B	Nominal Wall	*304 Stainless Steel* Part Number	*316L Stainless Steel* Part Number
1"	2.562	2.062	.065	***B2CM-G100***	***B2CM-R100***
1½"	3.438	2.937	.065	***B2CM-G150***	***B2CM-R150***
2"	4.562	4.062	.065	***B2CM-G200***	***B2CM-R200***
2½"	5.688	5.187	.065	***B2CM-G250***	***B2CM-R250***
3"	6.812	6.312	.065	***B2CM-G300***	***B2CM-R300***
4"	8.937	8.312	.083	***B2CM-G400***	***B2CM-R400***

Polished 45° Clamp x Weld Elbows - *B2KM*

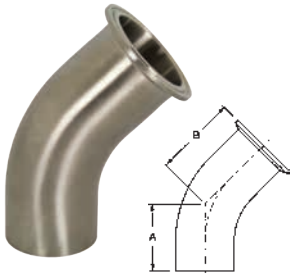

Tube OD	A	B	Nominal Wall	*304 Stainless Steel* Part Number	*316L Stainless Steel* Part Number
1"	1.188	1.688	.065	***B2KM-G100***	***B2KM-R100***
1½"	1.625	2.125	.065	***B2KM-G150***	***B2KM-R150***
2"	2.312	2.812	.065	***B2KM-G200***	***B2KM-R200***
2½"	3.000	3.500	.065	***B2KM-G250***	***B2KM-R250***
3"	3.688	4.188	.065	***B2KM-G300***	***B2KM-R300***
4"	4.812	5.437	.083	***B2KM-G400***	***B2KM-R400***

Polished 90° Threaded Bevel Seat x Weld Elbows - *B2T*

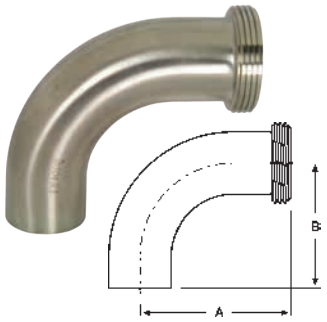

Tube OD	A	B	Nominal Wall	*304 Stainless Steel* Part Number
1"	2.780	2.062	.065	***B2T-G100***
1½"	3.656	2.937	.065	***B2T-G150***
2"	4.812	4.062	.065	***B2T-G200***
2½"	6.062	5.187	.065	***B2T-G250***
3"	7.218	6.312	.065	***B2T-G300***
4"	9.343	8.312	.083	***B2T-G400***

Polished 90° Plain Bevel Seat with Hex Nut x Weld Elbows - *B2FP*

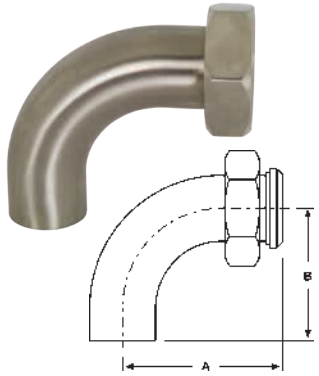

Tube OD	A	B	Nominal Wall	*304 Stainless Steel* Part Number
1"	2.780	2.062	.065	***B2FP-G100***
1½"	3.656	2.937	.065	***B2FP-G150***
2"	4.812	4.062	.065	***B2FP-G200***
2½"	6.062	5.187	.065	***B2FP-G250***
3"	7.218	6.312	.065	***B2FP-G300***
4"	9.343	8.312	.083	***B2FP-G400***

Other types of weld elbows are available call Dixon Sanitary for information

B2KT

B2KP

Weld Sweep Elbows

- Standard with no tangents. Call Dixon Sanitary for tangents, 45° and other radii.

Polished 12" 90° Weld Sweep Elbows - *B2SXL*

Tube OD	A	R	*316L Stainless Steel* Part Number
1½"	12.00	12.00	***B2SXL12-R150***
2"	12.00	12.00	***B2SXL12-R200***
3"	12.00	12.00	***B2SXL12-R300***
4"	12.00	12.00	***B2SXL12-R400***

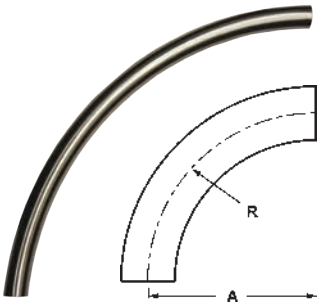

Polished 18" 90° Weld Sweep Elbows - *B2SXL*

Tube OD	A	R	*316L Stainless Steel* Part Number
1½"	18.00	18.00	***B2SXL18-R150***
2"	18.00	18.00	***B2SXL18-R200***
2½"	18.00	18.00	***B2SXL18-R250***
3"	18.00	18.00	***B2SXL18-R300***

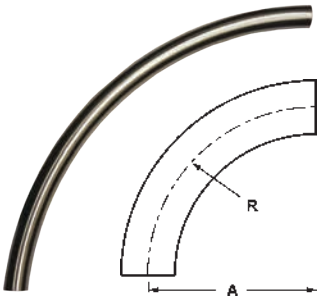

Polished 24" 90° Weld Sweep Elbows - *B2SXL*

Tube OD	A	R	*316L Stainless Steel* Part Number
1½"	24.00	24.00	***B2SXL24-R150***
2"	24.00	24.00	***B2SXL24-R200***
2½"	24.00	24.00	***B2SXL24-R250***
3"	24.00	24.00	***B2SXL24-R300***

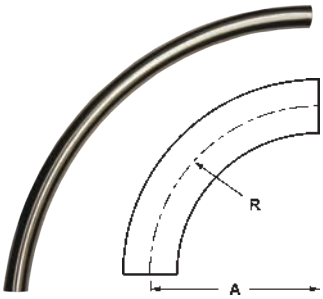

Polished 36" 90° Weld Sweep Elbows - *B2SXL*

Tube OD	A	R	*316L Stainless Steel* Part Number
3"	36.00	36.00	***B2SXL36-R300***
4"	36.00	36.00	***B2SXL36-R400***

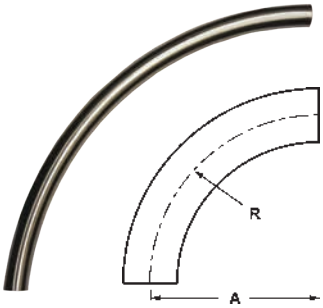

Weld Tees

Polished Short Weld Tees - *B7WWW*

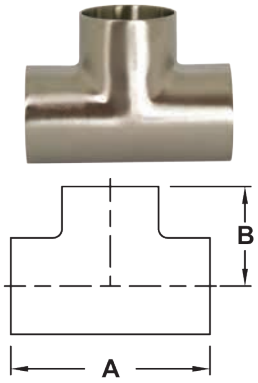

Tube OD	A	B	Nominal Wall	*304 Stainless Steel* Part Number	*316L Stainless Steel* Part Number
1"	2.250	1.125	.065	***B7WWW-G100P***	***B7WWW-R100P***
1½"	3.312	1.656	.065	***B7WWW-G150P***	***B7WWW-R150P***
2"	4.124	2.062	.065	***B7WWW-G200P***	***B7WWW-R200P***
2½"	4.688	2.344	.065	***B7WWW-G250P***	***B7WWW-R250P***
3"	5.188	2.594	.065	***B7WWW-G300P***	***B7WWW-R300P***
4"	6.876	3.438	.083	***B7WWW-G400P***	***B7WWW-R400P***

Polished Long Weld Tees - *B7W*

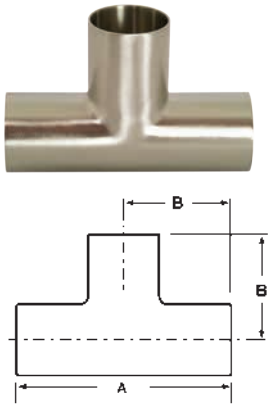

Tube OD	A	B	Nominal Wall	*304 Stainless Steel* Part Number	*316L Stainless Steel* Part Number
½"	3.750	1.875	.065	---	***B7W-R50P***
¾"	4.000	2.000	.065	---	***B7W-R75P***
1"	3.750	1.875	.065	***B7W-G100P***	***B7W-R100P***
1½"	4.500	2.250	.065	***B7W-G150P***	***B7W-R150P***
2"	6.000	3.000	.065	***B7W-G200P***	***B7W-R200P***
2½"	6.000	3.000	.065	***B7W-G250P***	***B7W-R250P***
3"	6.500	3.250	.065	***B7W-G300P***	***B7W-R300P***
4"	7.750	3.875	.083	***B7W-G400P***	***B7W-R400P***
6"	11.250	5.625	.109	***B7W-G600P***	***B7W-R600P***
8"	14.000	7.000	.120	***B7W-G800P***	***B7W-R800P***

Polished Reducing Weld Tees - *B7RWWW*

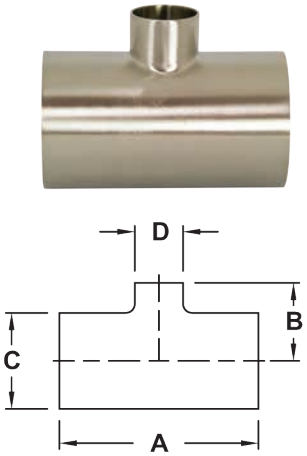

Tube OD	A	B	C	D	Nominal Wall	*304 Stainless Steel* Part Number	*316L Stainless Steel* Part Number
¾" x ½"	4.000	2.000	.750	.500	.065	---	***B7RWWW-R7550P***
1" x ½"	4.250	2.125	1.000	.500	.065	---	***B7RWWW-R10050P***
1" x ¾"	4.250	2.125	1.000	.750	.065	---	***B7RWWW-R10075P***
1½" x ½"	4.750	2.375	1.500	.500	.065	---	***B7RWWW-R15050P***
1½" x ¾"	4.750	2.375	1.500	.750	.065	---	***B7RWWW-R15075P***
1½" x 1"	3.312	1.375	1.500	1.000	.065	***B7RWWW-G150100P***	***B7RWWW-R150100P***
2" x ½"	5.750	2.625	2.000	.500	.065	---	***B7RWWW-R20050P***
2" x ¾"	5.750	2.625	2.000	.750	.065	---	***B7RWWW-R20075P***
2" x 1"	4.124	1.625	2.000	1.000	.065	***B7RWWW-G200100P***	***B7RWWW-R200100P***
2" x 1½"	4.124	1.906	2.000	1.500	.065	***B7RWWW-G200150P***	***B7RWWW-R200150P***
2½" x 1½"	4.688	2.156	2.500	1.500	.065	***B7RWWW-G250150P***	***B7RWWW-R250150P***
2½" x 2"	4.688	2.312	2.500	2.000	.065	***B7RWWW-G250200P***	***B7RWWW-R250200P***
3" x 1½"	5.188	2.406	3.000	1.500	.065	***B7RWWW-G300150P***	***B7RWWW-R300150P***
3" x 2"	5.188	2.562	3.000	2.000	.065	***B7RWWW-G300200P***	***B7RWWW-R300200P***
3" x 2½"	5.188	2.594	3.000	2.500	.083	***B7RWWW-G300250P***	***B7RWWW-R300250P***
4" x 1½"	6.876	2.906	4.000	1.500	.083	***B7RWWW-G400150P***	***B7RWWW-R400150P***
4" x 2"	6.876	3.062	4.000	2.000	.083	***B7RWWW-G400200P***	***B7RWWW-R400200P***
4" x 2½"	6.876	3.094	4.000	2.500	.083	***B7RWWW-G400250P***	***B7RWWW-R400250P***
4" x 3"	6.876	3.094	4.000	3.000	.083	***B7RWWW-G400300P***	***B7RWWW-R400300P***
6" x 2"	11.250	4.500	6.000	2.000	.109	***B7RWWW-G600200P***	***B7RWWW-R600200P***
6" x 3"	11.250	4.875	6.000	3.000	.109	***B7RWWW-G600300P***	***B7RWWW-R600300P***
6" x 4"	11.250	5.125	6.000	4.000	.109	***B7RWWW-G600400P***	***B7RWWW-R600400P***

Weld Tees

Polished Weld Run x Clamp Branch Tees - *B7WWM*

Tube OD	A	B	Nominal Wall	*304 Stainless Steel* Part Number	*316L Stainless Steel* Part Number
1"	2.250	1.625	.065	***B7WWM-G100***	***B7WWM-R100***
1½"	3.312	2.156	.065	***B7WWM-G150***	***B7WWM-R150***
2"	4.124	2.562	.065	***B7WWM-G200***	***B7WWM-R200***
2½"	4.688	2.844	.065	***B7WWM-G250***	***B7WWM-R250***
3"	5.188	3.094	.065	***B7WWM-G300***	***B7WWM-R300***
4"	6.876	4.063	.083	***B7WWM-G400***	***B7WWM-R400***

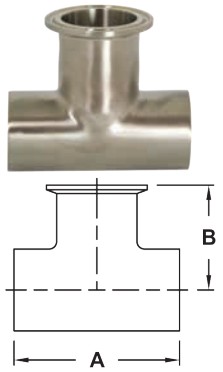

Polished Weld x Clamp Run x Clamp Branch Tees - *B7WMM*

Tube OD	A	B	Nominal Wall	*304 Stainless Steel* Part Number
1"	2.750	1.625	.065	***B7WMM-G100***
1½"	3.812	2.156	.065	***B7WMM-G150***
2"	4.624	2.562	.065	***B7WMM-G200***
2½"	5.188	2.844	.065	***B7WMM-G250***
3"	5.688	3.094	.065	***B7WMM-G300***
4"	7.500	4.063	.083	***B7WMM-G400***

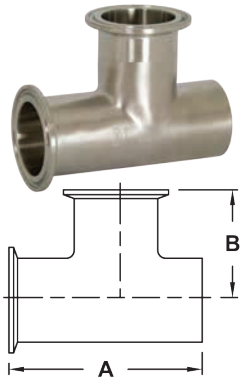

Polished Clamp Run x Weld Branch Tees - *B7MMW*

Tube OD	A	B	Nominal Wall	*304 Stainless Steel* Part Number
1"	3.250	1.125	.065	***B7MMW-G100***
1½"	4.312	1.656	.065	***B7MMW-G150***
2"	5.124	2.062	.065	***B7MMW-G200***
2½"	5.688	2.062	.065	***B7MMW-G250***
3"	6.188	2.594	.065	***B7MMW-G300***
4"	8.124	3.438	.083	***B7MMW-G400***

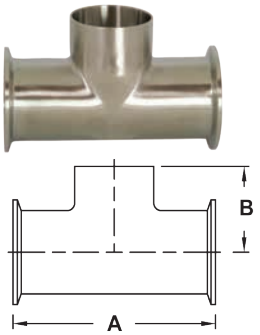

Other types of weld tees are available call Dixon Sanitary for information

B7WWT

B7WTT

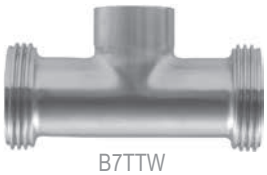
B7TTW

B7WTW

B7WMW

B7RWWWS

Weld Adapters

Long Weld Hose Adapters - *14WHRL*

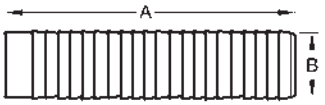

Feature:

- suitable for use with band clamps

Tube OD	A	B	Nominal Wall	*316L Stainless Steel* Part Number
1"	3.000	1.030	.116	***14WHRL-R100***
1½"	4.500	1.530	.116	***14WHRL-R150***
2"	4.500	2.030	.116	***14WHRL-R200***
2½"	5.000	2.530	.116	***14WHRL-R250***
3"	5.000	3.030	.116	***14WHRL-R300***
4"	4.875	4.030	.116	***14WHRL-R400***

Use of PVC tubing requires special techniques to prevent leakage. All assembly work must be done with heated tube. Cold durometer is 90 as opposed to rubber hose at 65 to 70 durometer. Banding buckles must be at 180° from one another.

Weld Hose Adapters - *14WHR*

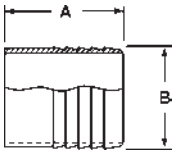

Tube OD	A	B	Nominal Wall	*316L Stainless Steel* Part Number
½"	1.500	.500	.065	***14WHR-R50***
¾"	1.500	.750	.065	***14WHR-R75***
1"	1.688	1.000	.065	***14WHR-R100***
1½"	1.688	1.500	.065	***14WHR-R150***
2"	2.312	2.000	.065	***14WHR-R200***
2½"	2.000	2.500	.065	***14WHR-R250***
3"	3.093	3.000	.065	***14WHR-R300***
4"	3.406	4.000	.083	***14WHR-R400***

Weld Reducers

Polished Concentric Weld Reducers - *B31W*

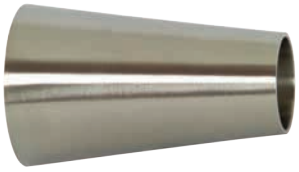

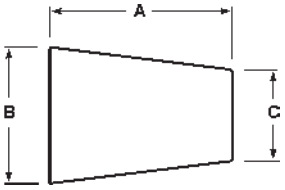

Tube OD	A	B	C	Nominal Wall	*304 Stainless Steel* Part Number	*316L Stainless Steel* Part Number
¾" x ½"	1.000	.750	.500	.065	---	***B31W-R7550P***
1" x ½"	2.000	1.000	.500	.065	---	***B31W-R10050P***
1" x ¾"	1.000	1.000	.750	.065	---	***B31W-R10075P***
1½" x ½"	4.000	1.500	.500	.065	---	***B31W-R15050P***
1½" x ¾"	3.000	1.500	.750	.065	---	***B31W-R15075P***
1½" x 1"	2.000	1.500	1.000	.065	***B31W-G150100P***	***B31W-R150100P***
2" x ½"	6.000	2.000	.500	.065	---	***B31W-R20050P***
2" x ¾"	5.000	2.000	.750	.065	---	***B31W-R20075P***
2" x 1"	4.000	2.000	1.000	.065	***B31W-G200100P***	***B31W-R200100P***
2" x 1½"	2.000	2.000	1.500	.065	***B31W-G200150P***	***B31W-R200150P***
2½" x 1½"	4.000	2.500	1.500	.065	***B31W-G250150P***	***B31W-R250150P***
2½" x 2"	2.000	2.500	2.000	.065	***B31W-G250200P***	***B31W-R250200P***
3" x 1"	8.000	3.000	1.000	.065	***B31W-G300100P***	***B31W-R300100P***
3" x 1½"	6.000	3.000	1.500	.065	***B31W-G300150P***	***B31W-R300150P***
3" x 2"	4.000	3.000	2.000	.065	***B31W-G300200P***	***B31W-R300200P***
3" x 2½"	2.000	3.000	2.500	.065	***B31W-G300250P***	***B31W-R300250P***
4" x 1½"	10.000	4.000	1.500	.083	***B31W-G400150P***	***B31W-R400150P***
4" x 2"	8.000	4.000	2.000	.083	***B31W-G400200P***	***B31W-R400200P***
4" x 2½"	6.000	4.000	2.500	.083	***B31W-G400250P***	***B31W-R400250P***
4" x 3"	4.000	4.000	3.000	.083	***B31W-G400300P***	***B31W-R400300P***
6" x 2"	5.500	6.000	2.000	.109	***B31W-G600200P***	***B31W-R600200P***
6" x 3"	5.500	6.000	3.000	.109	***B31W-G600300P***	***B31W-R600300P***
6" x 4"	5.500	6.000	4.000	.109	***B31W-G600400P***	***B31W-R600400P***
8" x 4"	6.000	8.000	4.000	.120	***B31W-G800400P***	***B31W-R800400P***
8" x 6"	6.000	8.000	6.000	.120	***B31W-G800600P***	***B31W-R800600P***

Weld Reducers

Polished Concentric Clamp x Weld Reducers - *B31M*

Tube OD	A	B	C	Nominal Wall	*304 Stainless Steel* Part Number	*316L Stainless Steel* Part Number
¾" x ½"	1.500	.750	.500	.065	---	**B31M-R7550**
1" x ½"	2.500	1.000	.500	.065	---	**B31M-R10050**
1" x ¾"	1.500	1.000	.750	.065	---	**B31M-R10075**
1½" x ½"	4.500	1.500	.500	.065	---	**B31M-R15050**
1½" x ¾"	3.500	1.000	.750	.065	---	**B31M-R15075**
1½" x 1"	2.500	1.500	1.000	.065	**B31M-G150100**	**B31M-R150100**
2" x 1"	4.500	2.000	1.000	.065	**B31M-G200100**	**B31M-R200100**
2" x 1½"	2.500	2.000	1.500	.065	**B31M-G200150**	**B31M-R200150**
2½" x 1½"	4.500	2.500	1.500	.065	**B31M-G250150**	**B31M-R250150**
2½" x 2"	2.500	2.500	2.000	.065	**B31M-G250200**	**B31M-R250200**
3" x 1½"	6.500	3.000	1.500	.065	**B31M-G300150**	**B31M-R300150**
3" x 2"	4.500	3.000	2.000	.065	**B31M-G300200**	**B31M-R300200**
3" x 2½"	2.500	3.000	2.500	.065	**B31M-G300250**	**B31M-R300250**
4" x 2"	8.625	4.000	2.000	.083	**B31M-G400200**	**B31M-R400200**
4" x 2½"	6.625	4.000	2.500	.083	**B31M-G400250**	**B31M-R400250**
4" x 3"	4.625	4.000	3.000	.083	**B31M-G400300**	**B31M-R400300**

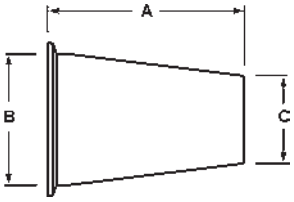

Polished Eccentric Weld Reducers - *B32W*

Tube OD	A	B	C	Nominal Wall	*304 Stainless Steel* Part Number	*316L Stainless Steel* Part Number
¾" x ½"	1.000	.750	.500	.065	---	**B32W-R7550P**
1" x ½"	2.000	1.000	.500	.065	---	**B32W-R10050P**
1" x ¾"	1.000	1.000	.750	.065	---	**B32W-R10075P**
1½" x ½"	4.000	1.500	.500	.065	---	**B32W-R15050P**
1½" x ¾"	3.000	1.500	.750	.065	---	**B32W-R15075P**
1½" x 1"	2.000	1.500	1.000	.065	**B32W-G150100P**	**B32W-R150100P**
2" x ½"	6.000	2.000	.500	.065	---	**B32W-R20050P**
2" x ¾"	5.000	2.000	.750	.065	---	**B32W-R20075P**
2" x 1"	4.000	2.000	1.000	.065	**B32W-G200100P**	**B32W-R200100P**
2" x 1½"	2.000	2.000	1.500	.065	**B32W-G200150P**	**B32W-R200150P**
2½" x 1½"	4.000	2.500	1.500	.065	**B32W-G250150P**	**B32W-R250150P**
2½" x 2"	2.000	2.500	2.000	.065	**B32W-G250200P**	**B32W-R250200P**
3" x 1"	8.000	3.000	1.000	.065	**B32W-G300100P**	**B32W-R300100P**
3" x 1½"	6.000	3.000	1.500	.065	**B32W-G300150P**	**B32W-R300150P**
3" x 2"	4.000	3.000	2.000	.065	**B32W-G300200P**	**B32W-R300200P**
3" x 2½"	2.000	3.000	2.500	.065	**B32W-G300250P**	**B32W-R300250P**
4" x 1½"	10.000	4.000	1.500	.083	**B32W-G400150P**	**B32W-R400150P**
4" x 2"	8.000	4.000	2.000	.083	**B32W-G400200P**	**B32W-R400200P**
4" x 2½"	6.000	4.000	2.500	.083	**B32W-G400250P**	**B32W-R400250P**
4" x 3"	4.000	4.000	3.000	.083	**B32W-G400300P**	**B32W-R400300P**
6" x 3"	5.500	6.000	3.000	.109	**B32W-G600300P**	**B32W-R600300P**
6" x 4"	5.500	6.000	4.000	.109	**B32W-G600400P**	**B32W-R600400P**
8" x 4"	6.000	8.000	4.000	.120	**B32W-G800400P**	**B32W-R800400P**
8" x 6"	6.000	8.000	6.000	.120	**B32W-G800600P**	**B32W-R800600P**

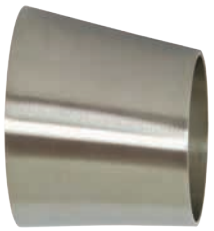

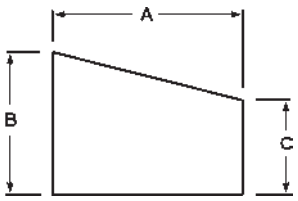

Other types of weld reducers are available call Dixon Sanitary for information

B31P

B32M

B32P

Miscellaneous Weld Configurations

Polished Weld Laterals - *B28WA*

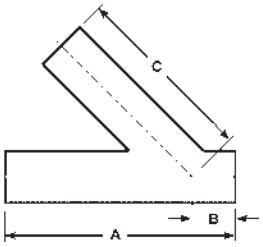

Tube OD	A	B	C	Nominal Wall	*316L Stainless Steel* Part Number
1"	6.000	1.000	5.000	.065	***B28WA-R100P***
1½"	7.375	1.188	6.188	.065	***B28WA-R150P***
2"	8.750	1.625	7.125	.065	***B28WA-R200P***
2½"	10.000	1.500	8.500	.065	***B28WA-R250P***
3"	10.750	1.875	8.875	.065	***B28WA-R300P***
4"	12.812	2.015	10.750	.083	***B28WA-R400P***
6"	18.000	3.500	14.500	.109	***B28WA-R600P***

Polished Weld True Wyes - *B28W*

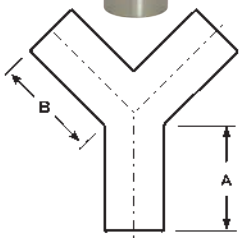

Tube OD	A	B	Nominal Wall	*316L Stainless Steel* Part Number
1"	2.000	2.438	.065	***B28W-R100P***
1½"	2.000	2.438	.065	***B28W-R150P***
2"	2.625	3.250	.065	***B28W-R200P***
2½"	3.370	4.125	.065	***B28W-R250P***
3"	4.000	4.875	.065	***B28W-R300P***
4"	5.375	5.375	.083	***B28W-R400P***

Polished Weld Crosses - *B9WWWW*

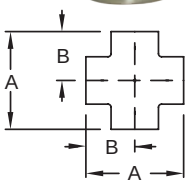

Tube OD	A	B	Nominal Wall	*304 Stainless Steel* Part Number	*316L Stainless Steel* Part Number
1"	2.250	1.125	.065	***B9WWWW-G100P***	***B9WWWW-R100P***
1½"	3.312	1.656	.065	***B9WWWW-G150P***	***B9WWWW-R150P***
2"	4.125	2.062	.065	***B9WWWW-G200P***	***B9WWWW-R200P***
2½"	4.687	2.343	.065	***B9WWWW-G250P***	***B9WWWW-R250P***
3"	5.187	2.593	.065	***B9WWWW-G300P***	***B9WWWW-R300P***
4"	6.875	3.437	.083	***B9WWWW-G400P***	***B9WWWW-R400P***

Polished Weld 180° Return Bends - *B2WUL*

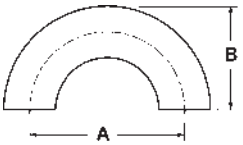

- bends are standard 1.5 x tube diameter

Tube OD	A	B	*316L Stainless Steel* Part Number
1"	3.000	2.000	***B2WUL-R100P***
1½"	4.500	3.000	***B2WUL-R150P***
2"	6.000	4.000	***B2WUL-R200P***
2½"	7.500	5.000	***B2WUL-R250P***
3"	9.000	6.000	***B2WUL-R300P***
4"	12.000	8.000	***B2WUL-R400P***

Miscellaneous Weld Configurations

Weld End Blue Protection Covers - *BCW*

Size	Part Number
½"	***BCW-050***
¾"	***BCW-075***
1"	***BCW-100***
1½"	***BCW-150***
2"	***BCW-200***
2½"	***BCW-250***
3"	***BCW-300***
4"	***BCW-400***
6"	***BCW-600***
8"	***BCW-800***

Features:

- Use these covers to protect all weld ends on fittings and valves.
- vinyl plastic

Bradford™ Unpolished Weld Fittings

A Complete Weld Connection

Weld end

Weld end

Product Specifications

Size range:
- ½" - 12" OD tube

Materials:
- G = 304 stainless steel
- R = 316L stainless steel
- other alloys are available

Finish:
- unpolished

Dimensions of stainless steel tube given in inches

Tube OD	Nominal Wall Thickness	Gage Number
½"	.065	16
¾"	.065	16
1"	.065	16
1½"	.065	16
2"	.065	16
2½"	.065	16
3"	.065	16
4"	.083	14
6"	.109	12
8"	.120	10
10"	.109	12
12"	.120	10

Index

Elbows 75
Caps 76
Adapters 76
Tees 77
Reducers 78
Miscellaneous 79
Flanges 80
Flange Gaskets 80

Unpolished Elbows

Unpolished 90° Weld Elbows with Tangents - *B2S*

Tube OD	A	Nominal Wall	*304 Stainless Steel* Part Number	*316L Stainless Steel* Part Number
½"	3.000	.065	---	B2S-R50U
¾"	3.000	.065	---	B2S-R75U
1"	2.062	.065	B2S-G100U	B2S-R100U
1½"	2.937	.065	B2S-G150U	B2S-R150U
2"	4.062	.065	B2S-G200U	B2S-R200U
2½"	5.187	.065	B2S-G250U	B2S-R250U
3"	6.312	.065	B2S-G300U	B2S-R300U
4"	8.312	.083	B2S-G400U	B2S-R400U

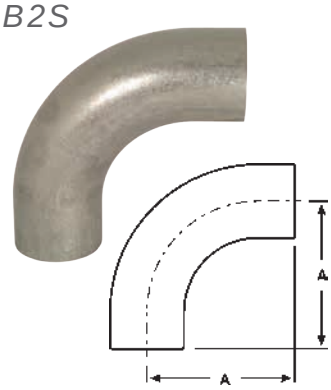

Unpolished 90° Weld Elbows - *B2WCL*

Tube OD	A	Nominal Wall	*304 Stainless Steel* Part Number	*316L Stainless Steel* Part Number
½"	1.125	.065	---	B2WCL-R50U
¾"	1.125	.065	---	B2WCL-R75U
1"	1.500	.065	B2WCL-G100U	B2WCL-R100U
1½"	2.250	.065	B2WCL-G150U	B2WCL-R150U
2"	3.000	.065	B2WCL-G200U	B2WCL-R200U
2½"	3.750	.065	B2WCL-G250U	B2WCL-R250U
3"	4.500	.065	B2WCL-G300U	B2WCL-R300U
4"	6.000	.083	B2WCL-G400U	B2WCL-R400U
6"	9.000	.109	B2WCL-G600U	B2WCL-R600U
8"	12.000	.120	B2WCL-G800U	B2WCL-R800U
10"	15.000	.109	B2WCL-G1000U	B2WCL-R1000U
12"	18.000	.120	B2WCL-G1200U	B2WCL-R1200U

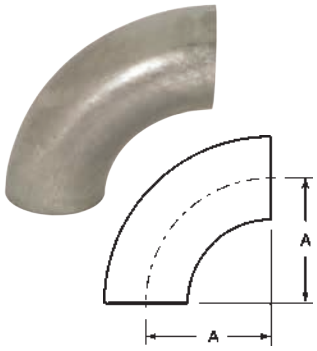

Unpolished 45° Weld Elbows with Tangents - *B2KS*

Tube OD	A	Nominal Wall	*304 Stainless Steel* Part Number	*316L Stainless Steel* Part Number
½"	2.250	.065	---	B2KS-R50U
¾"	2.250	.065	---	B2KS-R75U
1"	1.188	.065	B2KS-G100U	B2KS-R100U
1½"	1.625	.065	B2KS-G150U	B2KS-R150U
2"	2.312	.065	B2KS-G200U	B2KS-R200U
2½"	3.000	.065	B2KS-G250U	B2KS-R250U
3"	3.688	.065	B2KS-G300U	B2KS-R300U
4"	4.812	.083	B2KS-G400U	B2KS-R400U

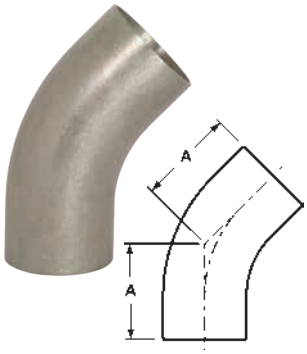

Unpolished 45° Weld Elbows - *B2WK*

Tube OD	A	R	Nominal Wall	*304 Stainless Steel* Part Number	*316L Stainless Steel* Part Number
½"	.466	1.125	.065	---	B2WK-R50U
¾"	.466	1.125	.065	---	B2WK-R75U
1"	.625	1.500	.065	B2WK-G100U	B2WK-R100U
1½"	.937	2.250	.065	B2WK-G150U	B2WK-R150U
2"	1.250	3.000	.065	B2WK-G200U	B2WK-R200U
2½"	1.562	3.750	.065	B2WK-G250U	B2WK-R250U
3"	1.875	4.500	.065	B2WK-G300U	B2WK-R300U
4"	2.500	6.000	.083	B2WK-G400U	B2WK-R400U
6"	3.750	9.000	.109	B2WK-G600U	B2WK-R600U
8"	5.000	12.000	.120	B2WK-G800U	B2WK-R800U
10"	6.250	15.000	.109	B2WK-G1000U	B2WK-R1000U
12"	7.500	18.000	.120	B2WK-G1200U	B2WK-R1200U

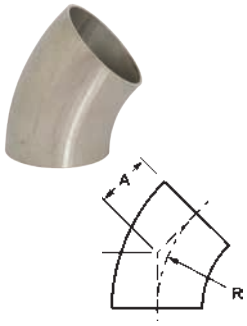

Unpolished End Caps

Unpolished End Caps - *B16W*

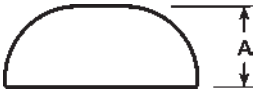

Tube OD	A	*304 Stainless Steel* Part Number	*316L Stainless Steel* Part Number
½"	.250	---	**B16W-R50**
¾"	.312	---	**B16W-R75**
1"	.375	**B16W-G100**	**B16W-R100**
1½"	.562	**B16W-G150**	**B16W-R150**
2"	.750	**B16W-G200**	**B16W-R200**
2½"	1.000	**B16W-G250**	**B16W-R250**
3"	1.250	**B16W-G300**	**B16W-R300**
4"	1.500	**B16W-G400**	**B16W-R400**
6"	1.875	**B16W-G600**	**B16W-R600**
8"	2.500	**B16W-G800**	**B16W-R800**

Unpolished Adapters

Male NPT x Weld End Adapters - *B19WB*

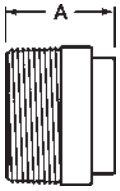

Tube OD	A	Nominal Wall	*304 Stainless Steel* Part Number	*316L Stainless Steel* Part Number
½"	1.625	.065	---	**B19WB-R50**
¾"	1.625	.065	---	**B19WB-R75**
1"	1.750	.065	**B19WB-G100**	**B19WB-R100**
1½"	1.750	.065	**B19WB-G150**	**B19WB-R150**
2"	1.812	.065	**B19WB-G200**	**B19WB-R200**
2½"	2.312	.065	**B19WB-G250**	**B19WB-R250**
3"	2.500	.065	**B19WB-G300**	**B19WB-R300**
4"	2.562	.083	**B19WB-G400**	**B19WB-R400**

Female NPT x Weld End Adapters - *B22WB*

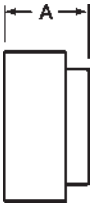

Tube OD	A	Nominal Wall	*304 Stainless Steel* Part Number	*316L Stainless Steel* Part Number
½"	1.250	.065	---	**B22WB-R50**
¾"	1.625	.065	---	**B22WB-R75**
1"	1.750	.065	**B22WB-G100**	**B22WB-R100**
1½"	1.750	.065	**B22WB-G150**	**B22WB-R150**
2"	1.812	.065	**B22WB-G200**	**B22WB-R200**
2½"	2.312	.065	**B22WB-G250**	**B22WB-R250**
3"	2.500	.065	**B22WB-G300**	**B22WB-R300**
4"	2.500	.083	**B22WB-G400**	**B22WB-R400**

Note: see pages 214-215 for pipe thread information

Unpolished Tees

Unpolished Short Weld Tees - *B7WWW*

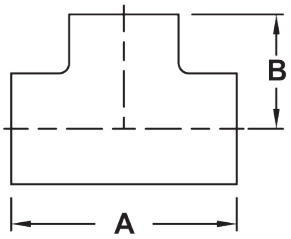

Tube OD	A	B	Nominal Wall	*304 Stainless Steel* Part Number	*316L Stainless Steel* Part Number
1"	2.250	1.125	.065	***B7WWW-G100U***	***B7WWW-R100U***
1½"	3.312	1.656	.065	***B7WWW-G150U***	***B7WWW-R150U***
2"	4.124	2.062	.065	***B7WWW-G200U***	***B7WWW-R200U***
2½"	4.688	2.344	.065	***B7WWW-G250U***	***B7WWW-R250U***
3"	5.188	2.594	.065	***B7WWW-G300U***	***B7WWW-R300U***
4"	6.876	3.438	.083	***B7WWW-G400U***	***B7WWW-R400U***

Unpolished Long Weld Tees - *B7W*

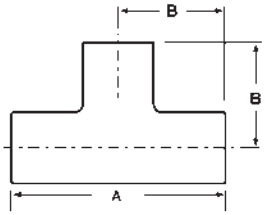

Tube OD	A	B	Nominal Wall	*304 Stainless Steel* Part Number	*316L Stainless Steel* Part Number
½"	3.750	1.875	.065	***---***	***B7W-R50U***
¾"	4.000	2.000	.065	***---***	***B7W-R75U***
1"	3.750	1.875	.065	***B7W-G100U***	***B7W-R100U***
1½"	4.500	2.250	.065	***B7W-G150U***	***B7W-R150U***
2"	6.000	3.000	.065	***B7W-G200U***	***B7W-R200U***
2½"	6.000	3.000	.065	***B7W-G250U***	***B7W-R250U***
3"	6.500	3.250	.065	***B7W-G300U***	***B7W-R300U***
4"	7.750	3.875	.083	***B7W-G400U***	***B7W-R400U***
6"	11.250	5.625	.109	***B7W-G600U***	***B7W-R600U***
8"	14.000	7.000	.120	***B7W-G800U***	***B7W-R800U***

Unpolished Reducing Weld Tees - *B7RWWW*

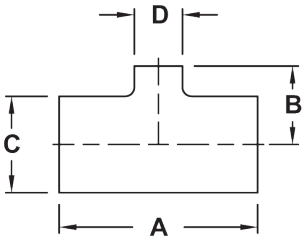

Tube OD	A	B	C	D	Nominal Wall	*304 Stainless Steel* Part Number	*316L Stainless Steel* Part Number
1½" x ¾"	4.750	2.375	1.500	.750	.065	***---***	***B7RWWW-R15075U***
1½" x 1"	3.312	1.375	1.500	1.000	.065	***B7RWWW-G150100U***	***B7RWWW-R150100U***
2" x ½"	5.750	2.625	2.000	.500	.065	***---***	***B7RWWW-R20050U***
2" x ¾"	5.750	2.625	2.000	.750	.065	***---***	***B7RWWW-R20075U***
2" x 1"	4.124	1.625	2.000	1.000	.065	***B7RWWW-G200100U***	***B7RWWW-R200100U***
2" x 1½"	4.124	1.906	2.000	1.500	.065	***B7RWWW-G200150U***	***B7RWWW-R200150U***
2½" x 1½"	4.688	2.156	2.500	1.500	.065	***B7RWWW-G250150U***	***B7RWWW-R250150U***
2½" x 2"	4.688	2.312	2.500	2.000	.065	***B7RWWW-G250200U***	***B7RWWW-R250200U***
3" x 1½"	5.188	2.406	3.000	1.500	.065	***B7RWWW-G300150U***	***B7RWWW-R300150U***
3" x 2"	5.188	2.562	3.000	2.000	.065	***B7RWWW-G300200U***	***B7RWWW-R300200U***
3" x 2½"	5.188	2.594	3.000	2.500	.065	***B7RWWW-G300250U***	***B7RWWW-R300250U***
4" x 1½"	6.876	2.906	4.000	1.500	.083	***B7RWWW-G400150U***	***B7RWWW-R400150U***
4" x 2"	6.876	3.062	4.000	2.000	.083	***B7RWWW-G400200U***	***B7RWWW-R400200U***
4" x 2½"	6.876	3.094	4.000	2.500	.083	***B7RWWW-G400250U***	***B7RWWW-R400250U***
4" x 3"	6.876	3.094	4.000	3.000	.083	***B7RWWW-G400300U***	***B7RWWW-R400300U***

Unpolished Reducers

Unpolished Concentric Weld Reducers - *B31W*

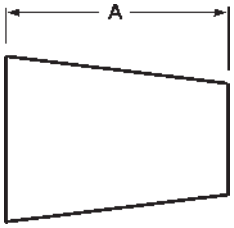

Tube OD	A	Nominal Wall	*304 Stainless Steel* Part Number	*316L Stainless Steel* Part Number
¾" x ½"	1.000	.065	---	**B31W-R7550U**
1" x ½"	2.000	.065	---	**B31W-R10050U**
1" x ¾"	1.000	.065	---	**B31W-R10075U**
1½" x ½"	4.000	.065	---	**B31W-R15050U**
1½" x ¾"	3.000	.065	---	**B31W-R15075U**
1½" x 1"	2.000	.065	**B31W-G150100U**	**B31W-R150100U**
2" x ¾"	5.000	.065	---	**B31W-R20075U**
2" x 1"	4.000	.065	**B31W-G200100U**	**B31W-R200100U**
2" x 1½"	2.000	.065	**B31W-G200150U**	**B31W-R200150U**
2½" x 1½"	4.000	.065	**B31W-G250150U**	**B31W-R250150U**
2½" x 2"	2.000	.065	**B31W-G250200U**	**B31W-R250200U**
3" x 1"	8.000	.065	**B31W-G300100U**	**B31W-R300100U**
3" x 1½"	6.000	.065	**B31W-G300150U**	**B31W-R300150U**
3" x 2"	4.000	.065	**B31W-G300200U**	**B31W-R300200U**
3" x 2½"	2.000	.065	**B31W-G300250U**	**B31W-R300250U**
4" x 1½"	10.000	.083	**B31W-G400150U**	**B31W-R400150U**
4" x 2"	8.000	.083	**B31W-G400200U**	**B31W-R400200U**
4" x 2½"	6.000	.083	**B31W-G400250U**	**B31W-R400250U**
4" x 3"	4.000	.083	**B31W-G400300U**	**B31W-R400300U**
6" x 3"	5.500	.109	**B31W-G600300U**	**B31W-R600300U**
6" x 4"	5.500	.109	**B31W-G600400U**	**B31W-R600400U**
8" x 4"	6.000	.120	**B31W-G800400U**	**B31W-R800400U**
8" x 6"	6.000	.120	**B31W-G800600U**	**B31W-R800600U**

Unpolished Eccentric Weld Reducers - *B32W*

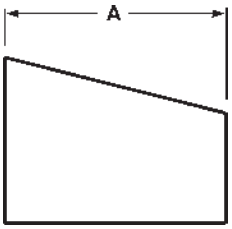

Tube OD	A	Nominal Wall	*304 Stainless Steel* Part Number	*316L Stainless Steel* Part Number
¾" x ½"	1.000	.065	---	**B32W-R7550U**
1" x ½"	2.000	.065	---	**B32W-R10050U**
1" x ¾"	1.000	.065	---	**B32W-R10075U**
1½" x ½"	4.000	.065	---	**B32W-R15050U**
1½" x ¾"	3.000	.065	---	**B32W-R15075U**
1½" x 1"	2.000	.065	**B32W-G150100U**	**B32W-R150100U**
2" x ¾"	5.000	.065	---	**B32W-R20075U**
2" x 1"	4.000	.065	**B32W-G200100U**	**B32W-R200100U**
2" x 1½"	2.000	.065	**B32W-G200150U**	**B32W-R200150U**
2½" x 2"	2.000	.065	**B32W-G250200U**	**B32W-R250200U**
3" x 1½"	6.000	.065	**B32W-G300150U**	**B32W-R300150U**
3" x 2"	4.000	.065	**B32W-G300200U**	**B32W-R300200U**
3" x 2½"	2.000	.065	**B32W-G300250U**	**B32W-R300250U**
4" x 1½"	10.000	.083	**B32W-G400150U**	**B32W-R400150U**
4" x 2"	8.000	.083	**B32W-G400200U**	**B32W-R400200U**
4" x 3"	4.000	.083	**B32W-G400300U**	**B32W-R400300U**
6" x 4"	5.500	.109	**B32W-G600400U**	**B32W-R600400U**
8" x 6"	6.000	.120	**B32W-G800600U**	**B32W-R800600U**

Miscellaneous Unpolished Configurations

Unpolished Weld Laterals - *B28WA*

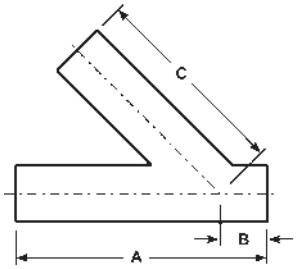

Tube OD	A	B	C	Nominal Wall	*316L Stainless Steel* Part Number
1"	6.000	1.000	5.000	.065	***B28WA-R100U***
1½"	7.375	1.188	6.188	.065	***B28WA-R150U***
2"	8.750	1.625	7.125	.065	***B28WA-R200U***
2½"	10.000	1.500	8.500	.065	***B28WA-R250U***
3"	10.750	1.875	8.875	.065	***B28WA-R300U***
4"	12.812	2.015	10.750	.083	***B28WA-R400U***
6"	18.000	3.000	14.500	.109	***B28WA-R600U***

Unpolished Weld True Wyes - *B28W*

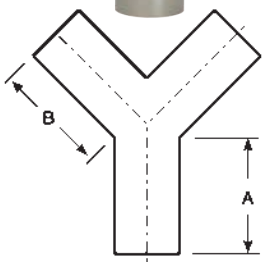

Tube OD	A	B	Nominal Wall	*316L Stainless Steel* Part Number
1"	2.000	2.438	.065	***B28W-R100U***
1½"	2.000	2.438	.065	***B28W-R150U***
2"	2.625	3.250	.065	***B28W-R200U***
2½"	3.370	4.125	.065	***B28W-R250U***
3"	4.000	4.875	.065	***B28W-R300U***
4"	5.375	5.375	.083	***B28W-R400U***

Unpolished Weld 180° Return Bends - *B2WUL*

- bends are standard 1.5 x tube diameter

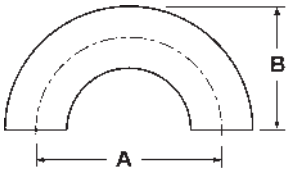

Tube OD	A	B	Nominal Wall	*316L Stainless Steel* Part Number
1"	3.000	2.000	.065	***B2WUL-R100U***
1½"	4.500	3.000	.065	***B2WUL-R150U***
2"	6.000	4.000	.065	***B2WUL-R200U***
2½"	7.500	5.000	.065	***B2WUL-R250U***
3"	9.000	6.000	.065	***B2WUL-R300U***
4"	12.000	8.000	.083	***B2WUL-R400U***

Weld End Blue Protection Covers - *BCW*

Size	Part Number
½"	***BCW-050***
¾"	***BCW-075***
1"	***BCW-100***
1½"	***BCW-150***
2"	***BCW-200***
2½"	***BCW-250***
3"	***BCW-300***
4"	***BCW-400***
6"	***BCW-600***
8"	***BCW-800***

Features:

- Use these covers to protect all weld ends on fittings and valves.
- vinyl plastic

Unpolished Flanges

Unpolished Slip-On 150# Flanges - *B38SL*

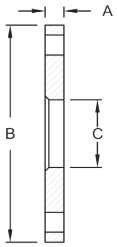

Tube OD	A	B	C	Number & Diameter Bolt Holes	Bolt Circle	*304 Stainless Steel* Part Number	*316L Stainless Steel* Part Number
1"	.375	4.250	1.063	4/.625	3.125	***B38SL-G100***	***B38SL-R100***
1½"	.375	5.000	1.563	4/.625	3.875	***B38SL-G150***	***B38SL-R150***
2"	.437	6.000	2.063	4/.750	4.750	***B38SL-G200***	***B38SL-R200***
2½"	.437	7.000	2.563	4/.750	5.500	***B38SL-G250***	***B38SL-R250***
3"	.500	7.500	3.063	4/.750	6.000	***B38SL-G300***	***B38SL-R300***
4"	.562	9.000	4.063	8/.750	7.500	***B38SL-G400***	***B38SL-R400***
6"	.562	11.000	6.063	8/.875	9.500	***B38SL-G600***	***B38SL-R600***
8"	.687	13.500	8.063	8/.875	11.750	***B38SL-G800***	***B38SL-R800***

Unpolished Type A Stub Ends - *14VB*

- typically used with B38SL flanges

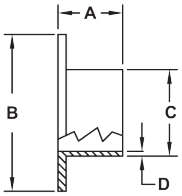

Tube OD	A	B	C	D	*316L Stainless Steel* Part Number
1"	1.625	2.000	1.000	.065	***14VB-R100***
1½"	1.750	2.875	1.500	.065	***14VB-R150***
2"	1.500	3.625	2.000	.065	***14VB-R200***
2½"	2.000	4.125	2.500	.065	***14VB-R250***
3"	2.250	5.000	3.000	.065	***14VB-R300***
4"	2.625	6.187	4.000	.084	***14VB-R400***
6"	3.000	8.500	6.000	.109	***14VB-R600***
8"	3.000	10.625	8.000	.120	***14VB-R800***
10"	3.500	12.450	10.000	.109	***14VB-R1000***

Unpolished Weld Neck Flanges - *B38W*

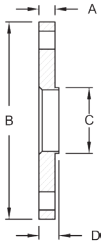

Tube OD	A	B	C	D	Number & Diameter Bolt Holes	Bolt Circle	*316L Stainless Steel* Part Number
1"	.500	4.250	1.000	.375	4/.625	3.125	***B38W-R100***
1½"	.500	5.000	1.500	.375	4/.625	3.875	***B38W-R150***
2"	.625	6.000	2.000	.500	4/.750	4.750	***B38W-R200***
2½"	.625	7.000	2.500	.500	4/.750	5.500	***B38W-R250***
3"	.625	7.500	3.000	.500	4/.750	6.000	***B38W-R300***
4"	.625	9.000	4.000	.500	8/.750	7.500	***B38W-R400***
6"	.625	11.000	6.000	.500	8/.875	9.500	***B38W-R600***

Other types of flanges are available call Dixon Sanitary for information

B14UB

Flange Gaskets

Neoprene

Feature:

- standard drop-ring type all 1/16" thick

Size	Part Number
1"	***NG10***
1¼"	***NG15***
1½"	***NG20***
2"	***NG25***
2½"	***NG30***

Size	Part Number
3"	***NG35***
4"	***NG40***
5"	***NG50***
6"	***NG60***
8"	***NG80***

Bradford™ Euro Fittings

European Connections

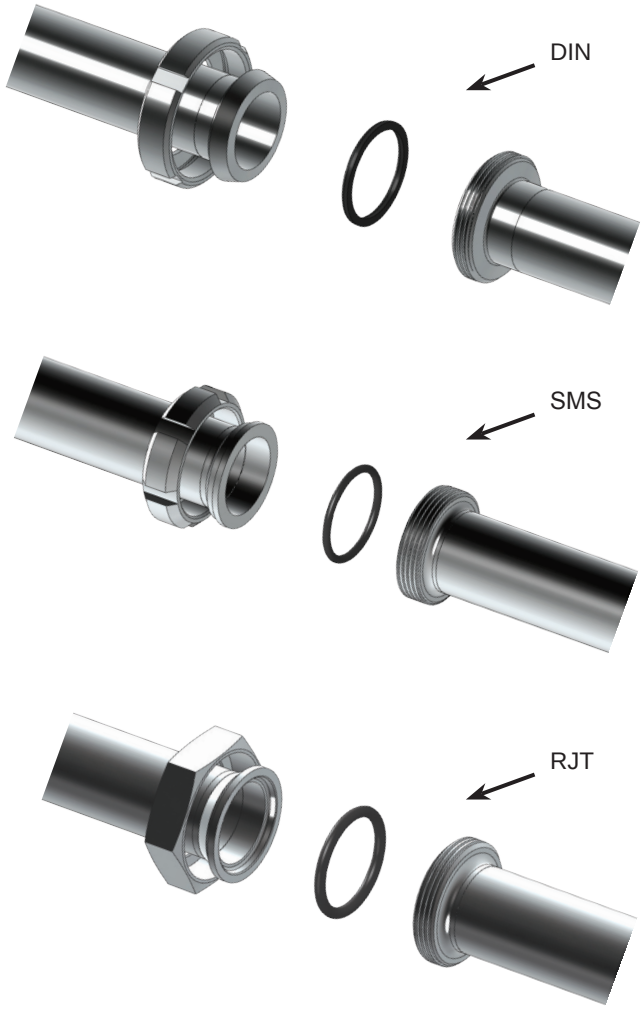

Product Specifications

Size range:
- 1" - 4" OD tube

Materials:
- G = 304 stainless steel
- R = 316 stainless steel

Finish:
- 3A sanitary finish ID and OD

Dimensions of stainless steel tube given in inches

Tube OD *	Nominal Wall Thickness	Gage Number
1"	.065	16
1½"	.065	16
2"	.065	16
2½"	.065	16
3"	.065	16
4"	.083	14

* metric tube size available special order only

Index

DIN fittings 82
SMS fittings 83
RJT fittings 84
Gaskets 85

Note: see pages 250-252 for fittings identification

DIN 11851

DIN Round Nuts *(DIN 11857)* - *13R*

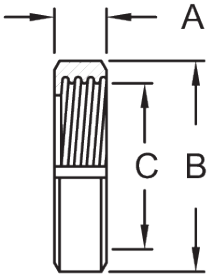

Tube OD	DN Size	A	B	C	*304 Stainless Steel* Part Number
1"	25	.83	2.48	2.05	***13R-G100DIN***
1½"	40	.83	3.07	2.56	***13R-G150DIN***
2"	50	.87	3.62	3.07	***13R-G200DIN***
2½"	65	.98	4.41	3.74	***13R-G250DIN***
3"	80	1.14	5.00	4.33	***13R-G300DIN***
4"	100	1.22	5.83	5.12	***13R-G400DIN***

DIN Blank Caps - *16AMP*

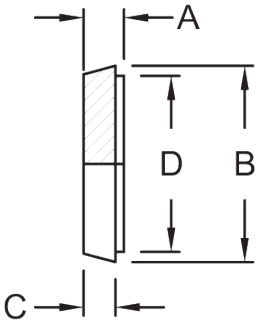

Tube OD	DN Size	A	B	C	D	*316 Stainless Steel* Part Number
1"	25	.51	1.73	.39	1.38	***16AMP-R100DIN***
1½"	40	.51	2.20	.39	1.89	***16AMP-R150DIN***
2"	50	.55	2.68	.43	2.40	***16AMP-R200DIN***
2½"	65	.63	3.39	.47	3.11	***16AMP-R250DIN***
3"	80	.63	3.66	.47	3.39	***16AMP-R300DIN***
4"	100	.79	4.76	.59	4.49	***16AMP-R400DIN***

DIN Welding Males - *15A*

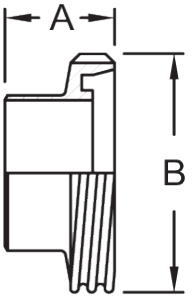

Tube OD	DN Size	A	B	*316 Stainless Steel* Part Number
1"	25	1.14	2.04	***15A-R100DIN***
1½"	40	1.30	2.55	***15A-R150DIN***
2"	50	1.38	3.07	***15A-R200DIN***
2½"	65	1.57	3.74	***15A-R250DIN***
3"	80	1.77	4.31	***15A-R300DIN***
4"	100	2.13	5.12	***15A-R400DIN***

DIN Welding Liners - *14A*

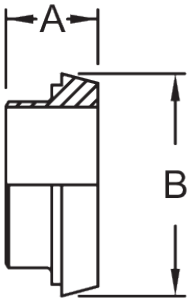

Tube OD	DN Size	A	B	*316 Stainless Steel* Part Number
1"	25	.87	1.73	***14A-R100DIN***
1½"	40	1.02	2.20	***14A-R150DIN***
2"	50	1.10	2.68	***14A-R200DIN***
2½"	65	1.26	3.39	***14A-R250DIN***
3"	80	1.46	3.94	***14A-R300DIN***
4"	100	1.73	4.76	***14A-R400DIN***

SMS

SMS Round Nuts - *13R*

Tube OD	DN Size	A	B	C	*304 Stainless Steel* Part Number
1"	25	.75	2.01	1.57	***13R-G100SMS***
1½"	38	.91	2.91	2.36	***13R-G150SMS***
2"	51	.94	3.31	2.76	***13R-G200SMS***
2½"	63.5	1.10	3.94	3.35	***13R-G250SMS***
3"	76	1.18	4.49	3.86	***13R-G300SMS***
4"	101.6	1.22	5.43	4.92	***13R-G400SMS***

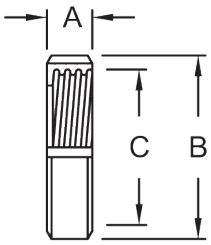

SMS Blank Caps - *16AMP*

Tube OD	DN Size	A	B	C	D	*316 Stainless Steel* Part Number
1"	25	.30	1.40	.14	1.25	***16AMP-R100SMS***
1½"	38	.31	2.20	.16	1.89	***16AMP-R150SMS***
2"	51	.35	2.56	.16	2.38	***16AMP-R200SMS***
2½"	63.5	.35	3.15	.16	2.89	***16AMP-R250SMS***
3"	76	.43	3.66	.20	3.41	***16AMP-R300SMS***
4"	101.6	.43	4.65	.23	4.43	***16AMP-R400SMS***

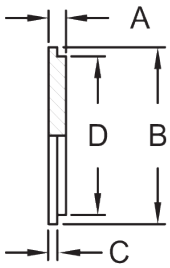

SMS Welding Males - *15A*

Tube OD	DN Size	A	B	*316 Stainless Steel* Part Number
1"	25	.75	1.57	***15A-R100SMS***
1½"	38	.91	2.36	***15A-R150SMS***
2"	51	.91	2.76	***15A-R200SMS***
2½"	63.5	1.06	3.35	***15A-R250SMS***
3"	76	1.06	3.86	***15A-R300SMS***
4"	101.6	1.18	4.92	***15A-R400SMS***

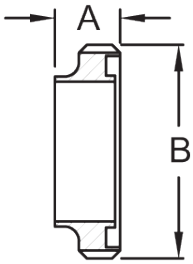

SMS Welding Liners - *14A*

Tube OD	DN Size	A	B	*316 Stainless Steel* Part Number
1"	25	.61	1.40	***14A-R100SMS***
1½"	38	.63	2.17	***14A-R150SMS***
2"	51	.67	2.56	***14A-R200SMS***
2½"	63.5	.67	3.16	***14A-R250SMS***
3"	76	.75	3.66	***14A-R300SMS***
4"	101.6	.75	4.65	***14A-R400SMS***

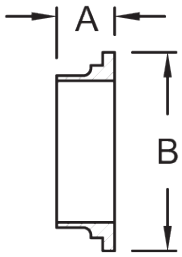

DIN and SMS Spanner Wrenches - *SP*

Used On Sizes	DIN Size	A	*Nickel Plated Steel* Part Number
1" - 1½"	25-40	9.75	***DIN-SMS-60/90SP***
2" - 4"	50-101.6	13.00	***DIN-SMS90/155SP***

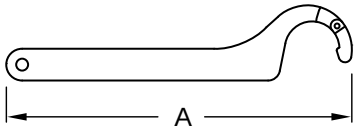

RJT BS:4825

RJT Hex Nuts - *13H*

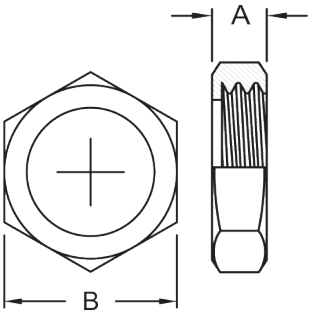

Tube OD	A	B	*304 Stainless Steel* Part Number
1"	.87	2.00	***13H-G100RJT***
1½"	.87	2.56	***13H-G150RJT***
2"	.87	3.12	***13H-G200RJT***
2½"	.87	3.62	***13H-G250RJT***
3"	.87	4.12	***13H-G300RJT***
4"	.87	5.12	***13H-G400RJT***

RJT Blank Caps - *13RBN*

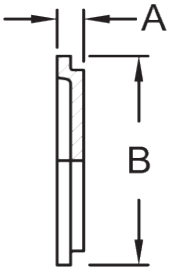

Tube OD	A	B	*304 Stainless Steel* Part Number
1"	.32	1.63	***13RBN-G100RJT***
1½"	.32	2.12	***13RBN-G150RJT***
2"	.32	2.62	***13RBN-G200RJT***
2½"	.32	3.12	***13RBN-G250RJT***
3"	.32	3.63	***13RBN-G300RJT***
4"	.32	4.63	***13RBN-G400RJT***

RJT Welding Males - *15A*

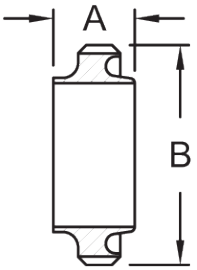

Tube OD	A	B	*316 Stainless Steel* Part Number
1"	1.06	1.80	***15A-R100RJT***
1½"	1.06	2.30	***15A-R150RJT***
2"	1.06	2.86	***15A-R200RJT***
2½"	1.06	3.36	***15A-R250RJT***
3"	1.06	3.86	***15A-R300RJT***
4"	1.06	4.86	***15A-R400RJT***

RJT Welding Liners - *14A*

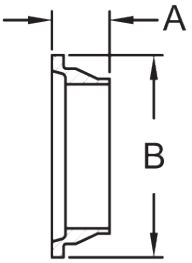

Tube OD	A	B	*316 Stainless Steel* Part Number
1"	.77	1.63	***14A-R100RJT***
1½"	.77	2.13	***14A-R150RJT***
2"	.77	2.63	***14A-R200RJT***
2½"	.77	3.13	***14A-R250RJT***
3"	.77	3.63	***14A-R300RJT***
4"	.77	4.63	***14A-R400RJT***

RJT Spanner Wrenches - *SP*

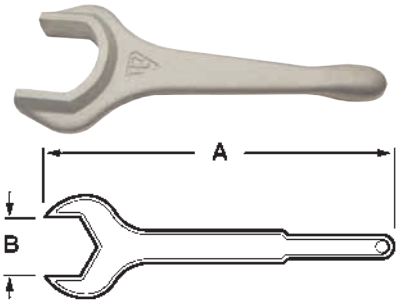

Size	A	B	*Aluminum* Part Number
1"	10.00	2.00	***RJT-100SP***
1½"	11.50	2.56	***RJT-150SP***
2"	12.00	3.12	***RJT-200SP***
2½"	13.50	3.62	***RJT-250SP***
3"	14.50	4.12	***RJT-300SP***
4"	17.50	5.12	***RJT-400SP***

European Gaskets

DIN Buna-N Euro Gaskets - *Black*

Features:
- color code: red dot
- meets 21CFR 177.2600

Tube OD	DN Size	ID	OD	Height	Part Number
1"	25	1.18	1.57	.20	***40MP-U100DIN***
1½"	40	1.65	2.05	.20	***40MP-U150DIN***
2"	50	2.13	2.52	.20	***40MP-U200DIN***
2½"	65	2.80	3.19	.20	***40MP-U250DIN***
3"	80	3.35	3.74	.20	***40MP-U300DIN***
4"	100	4.09	4.49	.24	***40MP-U400DIN***

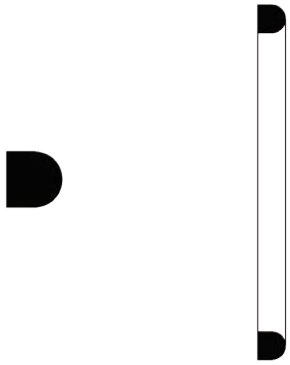

SMS Buna-N Euro Gaskets - *Black*

Features:
- color code: red dot
- meets 21CFR 177.2600

Tube OD	DN Size	ID	OD	Part Number
1"	25	.98	1.26	***40MP-U100SMS***
1½"	38	1.49	1.89	***40MP-U150SMS***
2"	51	2.00	2.40	***40MP-U200SMS***
2½"	63.5	2.50	2.89	***40MP-U250SMS***
3"	76	2.99	3.39	***40MP-U300SMS***
4"	101.6	4.09	4.49	***40MP-U400SMS***

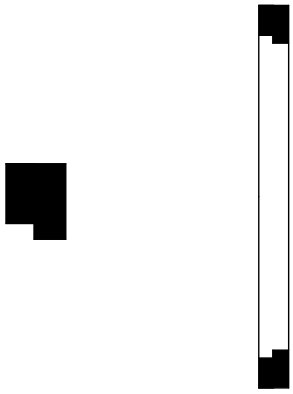

RJT Buna-N Euro Gaskets - *Black*

Features:
- color code: red dot
- meets 21CFR 177.2600

Tube OD	ID	Ø	Part Number
1"	1.06	.25	***40MP-U100RJT***
1½"	1.56	.25	***40MP-U150RJT***
2"	2.06	.25	***40MP-U200RJT***
2½"	2.56	.25	***40MP-U250RJT***
3"	3.06	.25	***40MP-U300RJT***
4"	4.06	.25	***40MP-U400RJT***

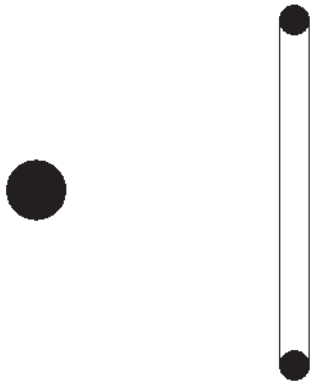

Note: refer to pages 234-236 for compatibility information

NEW FOR 2013

Bradford™ High Purity
BioPharm Line

Size range:
- ½" - 6" OD tube

Materials:
- 316L stainless steel

Finish:
- PL finish - SF1
- PM finish - SF4

Dimensions of stainless steel tube given in inches

Tube OD	Nominal Wall Thickness	Gage Number
½"	.065	16
¾"	.065	16
1"	.065	16
1½"	.065	16
2"	.065	16
2½"	.065	16
3"	.065	16
4"	.083	14
6"	.109	12

Index

Elbows 87-88
Tees 89-92
Reducers 93-95
Caps 96
Ferrules 96
Adapters 97
Technical Data 98-99
Packaging 100

All fittings are manufactured to meet the latest edition of the ASME BPE International Standard, Bioprocessing Equipment.

316L stainless steel material and dimensions meet all orbital welding specifications with controlled sulphur.

Bradford™ High Purity
BioPharm Line

NEW FOR 2013

90° Weld Elbows - T2S

Size	A	PL Finish - SF1	PM Finish - SF4
½"	3.000	T2S-050PL	T2S-050PM
¾"	3.000	T2S-075PL	T2S-075PM
1"	3.000	T2S-100PL	T2S-100PM
1½"	3.750	T2S-150PL	T2S-150PM
2"	4.750	T2S-200PL	T2S-200PM
2½"	5.500	T2S-250PL	T2S-250PM
3"	6.250	T2S-300PL	T2S-300PM
4"	8.000	T2S-400PL	T2S-400PM
6"	11.500	T2S-600PL	T2S-600PM

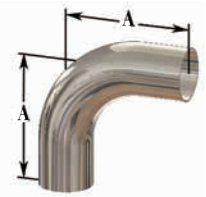

BPE Table DT-4.1.1-1

90° Clamp x Weld Elbows - T2CM

Size	A	B	PL Finish - SF1	PM Finish - SF4
½"	3.000	1.625	T2CM-050PL	T2CM-050PM
¾"	3.000	1.625	T2CM-075PL	T2CM-075PM
1"	3.000	2.000	T2CM-100PL	T2CM-100PM
1½"	3.750	2.750	T2CM-150PL	T2CM-150PM
2"	4.750	3.500	T2CM-200PL	T2CM-200PM
2½"	5.500	4.250	T2CM-250PL	T2CM-250PM
3"	6.250	5.000	T2CM-300PL	T2CM-300PM
4"	8.000	6.625	T2CM-400PL	T2CM-400PM
6"	11.500	10.500	T2CM-600PL	T2CM-600PM

BPE Table DT-4.1.1-2

90° Clamp x Clamp Elbows - T2CMP

Size	A	PL Finish - SF1	PM Finish - SF4
½"	1.625	T2CMP-050PL	T2CMP-050PM
¾"	1.625	T2CMP-075PL	T2CMP-075PM
1"	2.000	T2CMP-100PL	T2CMP-100PM
1½"	2.750	T2CMP-150PL	T2CMP-150PM
2"	3.500	T2CMP-200PL	T2CMP-200PM
2½"	4.250	T2CMP-250PL	T2CMP-250PM
3"	5.000	T2CMP-300PL	T2CMP-300PM
4"	6.625	T2CMP-400PL	T2CMP-400PM
6"	10.500	T2CMP-600PL	T2CMP-600PM

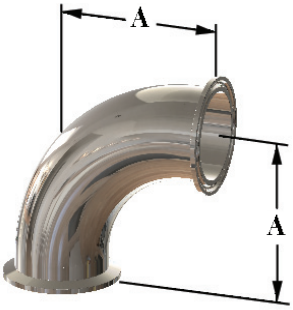

BPE Table DT-4.1.1-3

45° Weld Elbows - T2KS

Size	A	PL Finish - SF1	PM Finish - SF4
½"	2.250	T2KS-050PL	T2KS-050PM
¾"	2.250	T2KS-075PL	T2KS-075PM
1"	2.250	T2KS-100PL	T2KS-100PM
1½"	2.500	T2KS-150PL	T2KS-150PM
2"	3.000	T2KS-200PL	T2KS-200PM
2½"	3.375	T2KS-250PL	T2KS-250PM
3"	3.625	T2KS-300PL	T2KS-300PM
4"	4.500	T2KS-400PL	T2KS-400PM
6"	6.250	T2KS-600PL	T2KS-600PM

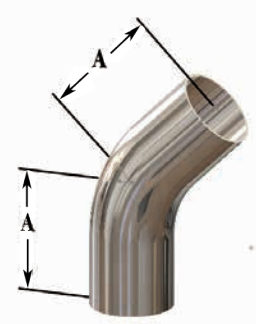

BPE Table DT-4.1.1-4

Note: Not all sizes and finishes are stocked

PL Finish – SF1
OD = 32R_a Mechanically Polished
ID = 20R_a Mechanically Polished

PM Finish – SF4
OD = 32R_a Mechanically Polished
ID = 15R_a Mechanically Polished and Electropolished

NEW FOR 2013

Bradford™ High Purity
BioPharm Line

45° Clamp x Weld Elbows - T2KM

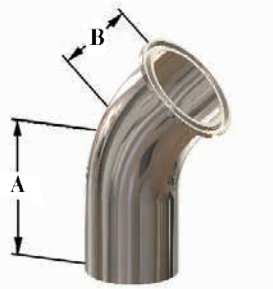

BPE Table DT-4.1.1-5

Size	A	B	PL Finish - SF1	PM Finish - SF4
½"	2.250	1.000	T2KM-050PL	T2KM-050PM
¾"	2.250	1.000	T2KM-075PL	T2KM-075PM
1"	2.250	1.125	T2KM-100PL	T2KM-100PM
1½"	2.500	1.438	T2KM-150PL	T2KM-150PM
2"	3.000	1.750	T2KM-200PL	T2KM-200PM
2½"	3.375	2.063	T2KM-250PL	T2KM-250PM
3"	3.625	2.380	T2KM-300PL	T2KM-300PM
4"	4.500	3.125	T2KM-400PL	T2KM-400PM
6"	6.250	5.250	T2KM-600PL	T2KM-600PM

45° Clamp x Clamp Elbows - T2KMP

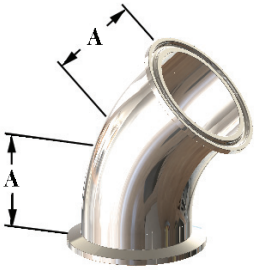

BPE Table DT-4.1.1-6

Size	A	PL Finish - SF1	PM Finish - SF4
½"	1.000	T2KMP-050PL	T2KMP-050PM
¾"	1.000	T2KMP-075PL	T2KMP-075PM
1"	1.125	T2KMP-100PL	T2KMP-100PM
1½"	1.438	T2KMP-150PL	T2KMP-150PM
2"	1.750	T2KMP-200PL	T2KMP-200PM
2½"	2.063	T2KMP-250PL	T2KMP-250PM
3"	2.375	T2KMP-300PL	T2KMP-300PM
4"	3.125	T2KMP-400PL	T2KMP-400PM
6"	5.250	T2KMP-600PL	T2KMP-600PM

88° Weld Elbows - T2S88

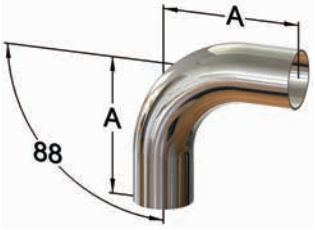

BPE Table DT-4.1.1-1

Size	A	PL Finish - SF1	PM Finish - SF4
½"	3.060	T2S88-050PL	T2S88-050PM
¾"	3.060	T2S88-075PL	T2S88-075PM
1"	3.430	T2S88-100PL	T2S88-100PM
1½"	3.800	T2S88-150PL	T2S88-150PM
2"	4.810	T2S88-200PL	T2S88-200PM
2½"	5.560	T2S88-250PL	T2S88-250PM
3"	6.310	T2S88-300PL	T2S88-300PM
4"	8.070	T2S88-400PL	T2S88-400PM
6"	11.580	T2S88-600PL	T2S88-600PM

92° Weld Elbows - T2S92

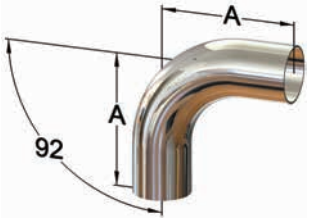

BPE Table DT-4.1.1-1

Size	A	PL Finish - SF1	PM Finish - SF4
½"	3.040	T2S92-050PL	T2S92-050PM
¾"	3.040	T2S92-075PL	T2S92-075PM
1"	3.050	T2S92-100PL	T2S92-100PM
1½"	3.830	T2S92-150PL	T2S92-150PM
2"	4.850	T2S92-200PL	T2S92-200PM
2½"	5.630	T2S92-250PL	T2S92-250PM
3"	6.410	T2S92-300PL	T2S92-300PM
4"	8.210	T2S92-400PL	T2S92-400PM
6"	11.410	T2S92-600PL	T2S92-600PM

Note: Not all sizes and finishes are stocked

PL Finish – SF1
OD = 32R_a Mechanically Polished
ID = 20R_a Mechanically Polished

PM Finish – SF4
OD = 32R_a Mechanically Polished
ID = 15R_a Mechanically Polished and Electropolished

Bradford™ High Purity
BioPharm Line

NEW FOR 2013

Weld x Weld x Weld Tees - T7WWW

Size	A	B	PL Finish - SF1	PM Finish - SF4
½"	3.750	1.875	T7WWW-050PL	T7WWW-050PM
¾"	4.000	2.000	T7WWW-075PL	T7WWW-075PM
1"	4.250	2.125	T7WWW-100PL	T7WWW-100PM
1½"	4.750	2.375	T7WWW-150PL	T7WWW-150PM
2"	5.750	2.875	T7WWW-200PL	T7WWW-200PM
2½"	6.250	3.125	T7WWW-250PL	T7WWW-250PM
3"	6.750	3.375	T7WWW-300PL	T7WWW-300PM
4"	8.250	4.125	T7WWW-400PL	T7WWW-400PM
6"	11.250	5.625	T7WWW-600PL	T7WWW-600PM

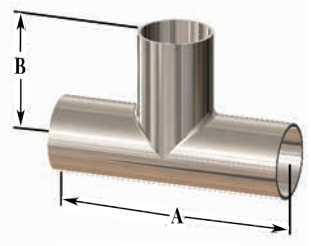

BPE Table DT-4.1.2-1

Weld x Weld x Weld Reducing Tees - T7RWWW

Size	A	B	PL Finish - SF1	PM Finish - SF4
¾" x ½"	4.000	2.000	T7RWWW-075050PL	T7RWWW-075050PM
1" x ½"	4.250	2.125	T7RWWW-100050PL	T7RWWW-100050PM
1" x ¾"	4.250	2.125	T7RWWW-100075PL	T7RWWW-100075PM
1½" x ½"	4.750	2.375	T7RWWW-150050PL	T7RWWW-150050PM
1½" x ¾"	4.750	2.375	T7RWWW-150075PL	T7RWWW-150075PM
1½" x 1"	4.750	2.375	T7RWWW-150100PL	T7RWWW-150100PM
2" x ½"	5.750	2.625	T7RWWW-200050PL	T7RWWW-200050PM
2" x ¾"	5.750	2.625	T7RWWW-200075PL	T7RWWW-200075PM
2" x 1"	5.750	2.625	T7RWWW-200100PL	T7RWWW-200100PM
2" x 1½"	5.750	2.625	T7RWWW-200150PL	T7RWWW-200150PM
2½" x ¾"	6.250	2.875	T7RWWW-250075PL	T7RWWW-250075PM
2½" x 1"	6.250	2.875	T7RWWW-250100PL	T7RWWW-250100PM
2½" x 1½"	6.250	2.875	T7RWWW-250150PL	T7RWWW-250150PM
2½" x 2"	6.250	2.875	T7RWWW-250200PL	T7RWWW-250200PM
3" x ½"	6.750	3.125	T7RWWW-300050PL	T7RWWW-300050PM
3" x ¾"	6.750	3.125	T7RWWW-300075PL	T7RWWW-300075PM
3" x 1"	6.750	3.125	T7RWWW-300100PL	T7RWWW-300100PM
3" x 1½"	6.750	3.125	T7RWWW-300150PL	T7RWWW-300150PM
3" x 2"	6.750	3.125	T7RWWW-300200PL	T7RWWW-300200PM
3" x 2½"	6.750	3.125	T7RWWW-300250PL	T7RWWW-300250PM
4" x ½"	8.250	3.625	T7RWWW-400050PL	T7RWWW-400050PM
4" x ¾"	8.250	3.625	T7RWWW-400075PL	T7RWWW-400075PM
4" x 1"	8.250	3.625	T7RWWW-400100PL	T7RWWW-400100PM
4" x 1½"	8.250	3.625	T7RWWW-400150PL	T7RWWW-400150PM
4" x 2"	8.250	3.875	T7RWWW-400200PL	T7RWWW-400200PM
4" x 2½"	8.250	3.875	T7RWWW-400250PL	T7RWWW-400250PM
4" x 3"	8.250	3.875	T7RWWW-400300PL	T7RWWW-400300PM
6" x 3"	11.250	4.875	T7RWWW-600300PL	T7RWWW-600300PM
6" x 4"	11.250	5.125	T7RWWW-600400PL	T7RWWW-600400PM

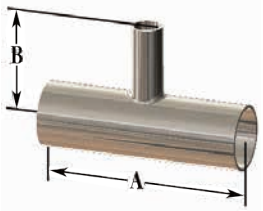

BPE Table DT-4.1.2-6

Weld x Weld x Clamp Tees - T7WWM

Size	A	B	PL Finish - SF1	PM Finish - SF4
½"	3.750	2.250	T7WWM-050PL	T7WWM-050PM
¾"	4.000	2.375	T7WWM-075PL	T7WWM-075PM
1"	4.250	2.625	T7WWM-100PL	T7WWM-100PM
1½"	4.750	2.875	T7WWM-150PL	T7WWM-150PM
2"	5.750	3.375	T7WWM-200PL	T7WWM-200PM
2½"	6.250	3.625	T7WWM-250PL	T7WWM-250PM
3"	6.750	3.875	T7WWM-300PL	T7WWM-300PM
4"	8.250	4.750	T7WWM-400PL	T7WWM-400PM
6"	11.250	7.125	T7WWM-600PL	T7WWM-600PM

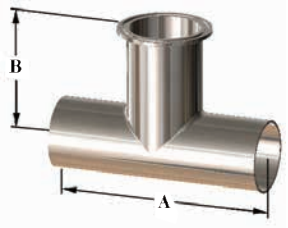

Note: Not all sizes and finishes are stocked

PL Finish – SF1
OD = 32R_a Mechanically Polished
ID = 20R_a Mechanically Polished

PM Finish – SF4
OD = 32R_a Mechanically Polished
ID = 15R_a Mechanically Polished and Electropolished

NEW FOR 2013

Bradford™ High Purity
BioPharm Line

3A Clamp x Clamp x Clamp Tees - T7MP

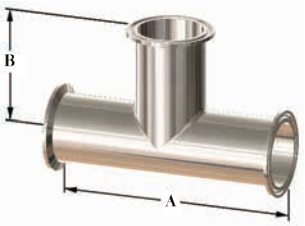

BPE Table DT-4.1.2-4

Size	A	B	PL Finish - SF1	PM Finish - SF4
½"	4.500	2.250	***T7MP-050PL***	***T7MP-050PM***
¾"	4.750	2.375	***T7MP-075PL***	***T7MP-075PM***
1"	5.250	2.625	***T7MP-100PL***	***T7MP-100PM***
1½"	5.750	2.875	***T7MP-150PL***	***T7MP-150PM***
2"	6.750	3.375	***T7MP-200PL***	***T7MP-200PM***
2½"	7.250	3.625	***T7MP-250PL***	***T7MP-250PM***
3"	7.750	3.875	***T7MP-300PL***	***T7MP-300PM***
4"	9.500	4.750	***T7MP-400PL***	***T7MP-400PM***
6"	14.250	7.125	***T7MP-600PL***	***T7MP-600PM***

3A Clamp x Clamp x Clamp Reducing Tees - T7RMP

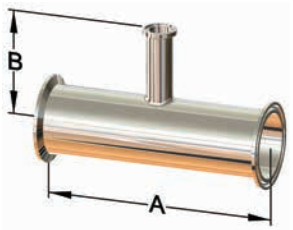

BPE Table DT-4.1.2-8

Size	A	B	PL Finish - SF1	PM Finish - SF4
¾" x ½"	5.000	2.500	***T7RMP-075050PL***	***T7RMP-075050PM***
1" x ½"	5.250	2.625	***T7RMP-100050PL***	***T7RMP-100050PM***
1" x ¾"	5.250	2.625	***T7RMP-100075PL***	***T7RMP-100075PM***
1½" x ½"	5.750	2.875	***T7RMP-150050PL***	***T7RMP-150050PM***
1½" x ¾"	5.750	2.875	***T7RMP-150075PL***	***T7RMP-150075PM***
1½" x 1"	5.750	2.875	***T7RMP-150100PL***	***T7RMP-150100PM***
2" x ½"	6.750	3.125	***T7RMP-200050PL***	***T7RMP-200050PM***
2" x ¾"	6.750	3.125	***T7RMP-200075PL***	***T7RMP-200075PM***
2" x 1"	6.750	3.125	***T7RMP-200100PL***	***T7RMP-200100PM***
2" x 1 ½"	6.750	3.125	***T7RMP-200150PL***	***T7RMP-200150PM***
2½" x ½"	7.250	3.375	***T7RMP-250050PL***	***T7RMP-250050PM***
2½" x ¾"	7.250	3.375	***T7RMP-250075PL***	***T7RMP-250075PM***
2½" x 1"	7.250	3.375	***T7RMP-250100PL***	***T7RMP-250100PM***
2½" x 1½"	7.250	3.375	***T7RMP-250150PL***	***T7RMP-250150PM***
2½" x 2"	7.250	3.375	***T7RMP-250200PL***	***T7RMP-250200PM***
3" x ½"	7.750	3.625	***T7RMP-300050PL***	***T7RMP-300050PM***
3" x ¾"	7.750	3.625	***T7RMP-300075PL***	***T7RMP-300075PM***
3" x 1"	7.750	3.625	***T7RMP-300100PL***	***T7RMP-300100PM***
3" x 1 ½"	7.750	3.625	***T7RMP-300150PL***	***T7RMP-300150PM***
3" x 2"	7.750	3.625	***T7RMP-300200PL***	***T7RMP-300200PM***
3" x 2 ½"	7.750	3.625	***T7RMP-300250PL***	***T7RMP-300250PM***
4" x ½"	9.500	4.125	***T7RMP-400050PL***	***T7RMP-400050PM***
4" x ¾"	9.500	4.125	***T7RMP-400075PL***	***T7RMP-400075PM***
4" x 1"	9.500	4.125	***T7RMP-400100PL***	***T7RMP-400100PM***
4" x 1 ½"	9.500	4.125	***T7RMP-400150PL***	***T7RMP-400150PM***
4" x 2"	9.500	4.125	***T7RMP-400200PL***	***T7RMP-400200PM***
4" x 2 ½"	9.500	4.125	***T7RMP-400250PL***	***T7RMP-400250PM***
4" x 3"	9.500	4.125	***T7RMP-400300PL***	***T7RMP-400300PM***
6" x 3"	14.250	5.375	***T7RMP-600300PL***	***T7RMP-600300PM***
6" x 4"	14.250	5.750	***T7RMP-600400PL***	***T7RMP-600400PM***

Note: Not all sizes and finishes are stocked

PL Finish – SF1
OD = 32R_a Mechanically Polished
ID = 20R_a Mechanically Polished

PM Finish – SF4
OD = 32R_a Mechanically Polished
ID = 15R_a Mechanically Polished and Electropolished

Bradford™ High Purity
BioPharm Line

NEW FOR 2013

Weld x Weld x Clamp Short Outlet Tees - T7WWMS

Size	A	B	PL Finish - SF1	PM Finish - SF4
½"	3.750	1.000	T7WWMS-050PL	T7WWMS-050PM
¾"	4.000	1.125	T7WWMS-075PL	T7WWMS-075PM
1"	4.250	1.125	T7WWMS-100PL	T7WWMS-100PM
1½"	4.750	1.375	T7WWMS-150PL	T7WWMS-150PM
2"	5.750	1.625	T7WWMS-200PL	T7WWMS-200PM
2½"	6.250	1.875	T7WWMS-250PL	T7WWMS-250PM
3"	6.750	2.125	T7WWMS-300PL	T7WWMS-300PM
4"	8.250	2.750	T7WWMS-400PL	T7WWMS-400PM
6"	11.250	4.625	T7WWMS-600PL	T7WWMS-600PM

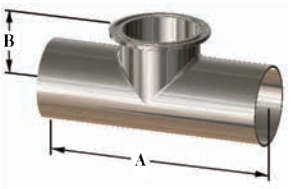

BPE Table DT-4.1.2-2

Weld x Weld x Clamp Short Outlet Reducing Tees - T7RWWMS

Size	A	B	PL Finish - SF1	PM Finish - SF4
¾" x ½"	4.000	1.000	T7RWWMS075050PL	T7RWWMS075050PM
1" x ½"	4.250	1.125	T7RWWMS100050PL	T7RWWMS100050PM
1" x ¾"	4.250	1.125	T7RWWMS100075PL	T7RWWMS100075PM
1½" x ½"	4.750	1.375	T7RWWMS150050PL	T7RWWMS150050PM
1½" x ¾"	4.750	1.375	T7RWWMS150075PL	T7RWWMS150075PM
1½" x 1"	4.750	1.375	T7RWWMS150100PL	T7RWWMS150100PM
2" x 1/2"	5.750	1.625	T7RWWMS200050PL	T7RWWMS200050PM
2" x ¾"	5.750	1.625	T7RWWMS200075PL	T7RWWMS200075PM
2" x 1"	5.750	1.625	T7RWWMS200100PL	T7RWWMS200100PM
2" x 1½"	5.750	1.625	T7RWWMS200150PL	T7RWWMS200150PM
2½" x ½"	6.250	1.875	T7RWWMS250050PL	T7RWWMS250050PM
2½" x ¾"	6.250	1.875	T7RWWMS250075PL	T7RWWMS250075PM
2½" x 1"	6.250	1.875	T7RWWMS250100PL	T7RWWMS250100PM
2½" x 1½"	6.250	1.875	T7RWWMS250150PL	T7RWWMS250150PM
2½" x 2"	6.250	1.875	T7RWWMS250200PL	T7RWWMS250200PM
3" x ½"	6.750	2.125	T7RWWMS300050PL	T7RWWMS300050PM
3" x ¾"	6.750	2.125	T7RWWMS300075PL	T7RWWMS300075PM
3" x 1"	6.750	2.125	T7RWWMS300100PL	T7RWWMS300100PM
3" x 1½"	6.750	2.125	T7RWWMS300150PL	T7RWWMS300150PM
3" x 2"	6.750	2.125	T7RWWMS300200PL	T7RWWMS300200PM
3" x 2½"	6.750	2.125	T7RWWMS300250PL	T7RWWMS300250PM
4" x ½"	8.250	2.625	T7RWWMS400050PL	T7RWWMS400050PM
4" x ¾"	8.250	2.625	T7RWWMS400075PL	T7RWWMS400075PM
4" x 1"	8.250	2.625	T7RWWMS400100PL	T7RWWMS400100PM
4" x 1½"	8.250	2.625	T7RWWMS400150PL	T7RWWMS400150PM
4" x 2"	8.250	2.625	T7RWWMS400200PL	T7RWWMS400200PM
4" x 2½"	8.250	2.625	T7RWWMS400250PL	T7RWWMS400250PM
4" x 3"	8.250	2.625	T7RWWMS400300PL	T7RWWMS400300PM
6" x 3"	11.250	3.625	T7RWWMS600300PL	T7RWWMS600300PM
6" x 4"	11.250	3.750	T7RWWMS600400PL	T7RWWMS600400PM

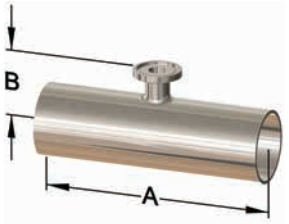

BPE Table DT-4.1.2-7

Clamp x Clamp x Clamp Short Outlet Tees - T7MPS

Size	A	B	PL Finish - SF1	PM Finish - SF4
½"	4.500	1.000	T7MPS-050PL	T7MPS-050PM
¾"	4.750	1.125	T7MPS-075PL	T7MPS-075PM
1"	5.250	1.125	T7MPS-100PL	T7MPS-100PM
1½"	5.750	1.375	T7MPS-150PL	T7MPS-150PM
2"	6.750	1.625	T7MPS-200PL	T7MPS-200PM
2½"	7.250	1.875	T7MPS-250PL	T7MPS-250PM
3"	7.750	2.125	T7MPS-300PL	T7MPS-300PM
4"	9.500	2.750	T7MPS-400PL	T7MPS-400PM
6"	14.250	4.625	T7MPS-600PL	T7MPS-600PM

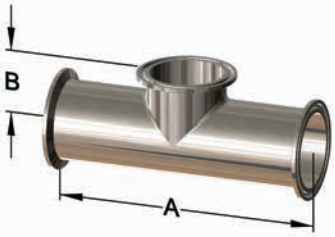

BPE Table DT-4.1.2-5

Note: Not all sizes and finishes are stocked

PL Finish – SF1
OD = 32R_a Mechanically Polished
ID = 20R_a Mechanically Polished

PM Finish – SF4
OD = 32R_a Mechanically Polished
ID = 15R_a Mechanically Polished and Electropolished

NEW FOR 2013

Bradford™ High Purity
BioPharm Line

Clamp x Clamp x Clamp Short Outlet Reducing Tees - T7RMPS

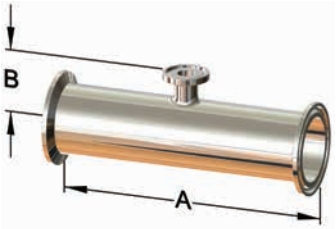

BPE Table DT-4.1.2-9

Size	A	B	PL Finish - SF1	PM Finish - SF4
¾" x ½"	5.000	1.000	T7RMPS-075050PL	T7RMPS-075050PM
1" x ½"	5.125	1.125	T7RMPS-100050PL	T7RMPS-100050PM
1" x ¾"	5.125	1.125	T7RMPS-100075PL	T7RMPS-100075PM
1½" x ½"	5.750	1.375	T7RMPS-150050PL	T7RMPS-150050PM
1½" x ¾"	5.750	1.375	T7RMPS-150075PL	T7RMPS-150075PM
1½" x 1"	5.750	1.375	T7RMPS-150100PL	T7RMPS-150100PM
2" x ½"	6.750	1.625	T7RMPS-200050PL	T7RMPS-200050PM
2" x ¾"	6.750	1.625	T7RMPS-200075PL	T7RMPS-200075PM
2" x 1"	6.750	1.625	T7RMPS-200100PL	T7RMPS-200100PM
2" x 1 ½"	6.750	1.625	T7RMPS-200150PL	T7RMPS-200150PM
2½" x ½"	7.250	1.875	T7RMPS-250050PL	T7RMPS-250050PM
2½" x ¾"	7.250	1.875	T7RMPS-250075PL	T7RMPS-250075PM
2½" x 1"	7.250	1.875	T7RMPS-250100PL	T7RMPS-250100PM
2½" x 1½"	7.250	1.875	T7RMPS-250150PL	T7RMPS-250150PM
2½" x 2"	7.250	1.875	T7RMPS-250200PL	T7RMPS-250200PM
3" x ½"	7.750	2.125	T7RMPS-300050PL	T7RMPS-300050PM
3" x ¾"	7.750	2.125	T7RMPS-300075PL	T7RMPS-300075PM
3" x 1"	7.750	2.125	T7RMPS-300100PL	T7RMPS-300100PM
3" x 1 ½"	7.750	2.125	T7RMPS-300150PL	T7RMPS-300150PM
3" x 2"	7.750	2.125	T7RMPS-300200PL	T7RMPS-300200PM
3" x 2 ½"	7.750	2.125	T7RMPS-300250PL	T7RMPS-300250PM
4" x ½"	9.500	2.625	T7RMPS-400050PL	T7RMPS-400050PM
4" x ¾"	9.500	2.625	T7RMPS-400075PL	T7RMPS-400075PM
4" x 1"	9.500	2.625	T7RMPS-400100PL	T7RMPS-400100PM
4" x 1 ½"	9.500	2.625	T7RMPS-400150PL	T7RMPS-400150PM
4" x 2"	9.500	2.625	T7RMPS-400200PL	T7RMPS-400200PM
4" x 2 ½"	9.500	2.625	T7RMPS-400250PL	T7RMPS-400250PM
4" x 3"	9.500	2.625	T7RMPS-400300PL	T7RMPS-400300PM
6" x 3"	14.250	3.625	T7RMPS-600300PL	T7RMPS-600300PM
6" x 4"	14.250	3.750	T7RMPS-600400PL	T7RMPS-600400PM

Weld x Weld x Clamp Instrument Tees - T7IWWMS

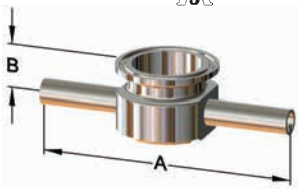

BPE Table DT-4.1.2-10

Size	A	B	PL Finish - SF1	PM Finish - SF4
½" x 1½"	5.000	.875	T7IWWMS050150PL	T7IWWMS050150PM
¾" x 1½"	5.000	1.000	T7IWWMS075150PL	T7IWWMS075150PM
1" x 1½"	5.000	1.125	T7IWWMS100150PL	T7IWWMS100150PM
½" x 2"	5.500	1.000	T7IWWMS050200PL	T7IWWMS050200PM
¾" x 2"	5.500	1.125	T7IWWMS075200PL	T7IWWMS075200PM
1" X 2"	5.500	1.250	T7IWWMS100200PL	T7IWWMS100200PM
1½" X 2"	5.500	1.500	T7IWWMS150200PL	T7IWWMS150200PM

Clamp x Clamp x Clamp Instrument Tees - T7IMPS

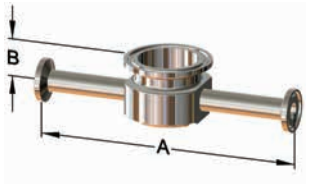

BPE Table DT-4.1.2-11

Size	A	B	PL Finish - SF1	PM Finish - SF4
½" x 1½"	6.000	.875	T7IMPS-050150PL	T7IMPS-050150PM
¾" x 1½"	6.000	1.000	T7IMPS-075150PL	T7IMPS-075150PM
1" x 1½"	6.000	1.125	T7IMPS-100150PL	T7IMPS-100150PM
½" x 2"	6.500	1.000	T7IMPS-050200PL	T7IMPS-050200PM
¾" x 2"	6.500	1.125	T7IMPS-075200PL	T7IMPS-075200PM
1" X 2"	6.500	1.250	T7IMPS-100200PL	T7IMPS-100200PM
1½" X 2"	6.500	1.500	T7IMPS-150200PL	T7IMPS-150200PM

Note: Not all sizes and finishes are stocked

PL Finish – SF1
OD = 32R_a Mechanically Polished
ID = 20R_a Mechanically Polished

PM Finish – SF4
OD = 32R_a Mechanically Polished
ID = 15R_a Mechanically Polished and Electropolished

Bradford™ High Purity
BioPharm Line

NEW FOR 2013

Weld x Weld Concentric Reducers - T31W

Size	A	PL Finish - SF1	PM Finish - SF4
¾" x ½"	4.00	T31W-075050PL	T31W-075050PM
1" x ½"	4.50	T31W-100050PL	T31W-100050PM
1" x ¾"	4.00	T31W-100075PL	T31W-100075PM
1½" x ½"	5.50	T31W-150050PL	T31W-150050PM
1½" x ¾"	5.00	T31W-150075PL	T31W-150075PM
1½" x 1"	5.00	T31W-150100PL	T31W-150100PM
2" x ½"	7.75	T31W-200050PL	T31W-200050PM
2" x ¾"	7.25	T31W-200075PL	T31W-200075PM
2" x 1"	7.25	T31W-200100PL	T31W-200100PM
2" x 1½"	5.25	T31W-200150PL	T31W-200150PM
2½" x ½"	9.750	T31W-250050PL	T31W-250050PM
2½" x ¾"	9.250	T31W-250075PL	T31W-250075PM
2½" x 1"	9.250	T31W-250100PL	T31W-250100PM
2½" x 1 ½"	7.250	T31W-250150PL	T31W-250150PM
2½" x 2"	5.500	T31W-250200PL	T31W-250200PM
3" x 1"	11.250	T31W-300100PL	T31W-300100PM
3" x 1½"	9.250	T31W-300150PL	T31W-300150PM
3" x 2"	7.500	T31W-300200PL	T31W-300200PM
3" x 2½"	5.500	T31W-300250PL	T31W-300250PM
4" x 1"	15.500	T31W-400100PL	T31W-400100PM
4" x 1½"	13.500	T31W-400150PL	T31W-400150PM
4" x 2"	11.750	T31W-400200PL	T31W-400200PM
4" x 2½"	9.750	T31W-400250PL	T31W-400250PM
4" x 3"	7.750	T31W-400300PL	T31W-400300PM
6" x 3"	10.000	T31W-600300PL	T31W-600300PM
6" x 4"	10.000	T31W-600400PL	T31W-600400PM

BPE Table DT-4.1.3-1(a)

Clamp x Weld Concentric Reducers - T31M

Size	A	PL Finish - SF1	PM Finish - SF4
¾" x ½"	3.000	T31M-075050PL	T31M-075050PM
1" x ½"	3.500	T31M-100050PL	T31M-100050PM
1" x ¾"	3.000	T31M-100075PL	T31M-100075PM
1½" x ½"	4.500	T31M-150050PL	T31M-150050PM
1½" x ¾"	4.000	T31M-150075PL	T31M-150075PM
1½" x 1"	4.000	T31M-150100PL	T31M-150100PM
2" x ½"	6.500	T31M-200050PL	T31M-200050PM
2" x ¾"	6.000	T31M-200075PL	T31M-200075PM
2" x 1"	6.000	T31M-200100PL	T31M-200100PM
2" x 1½"	4.000	T31M-200150PL	T31M-200150PM
2½" x ½"	8.500	T31M-250050PL	T31M-250050PM
2½" x ¾"	8.000	T31M-250075PL	T31M-250075PM
2½" x 1"	8.000	T31M-250100PL	T31M-250100PM
2½" x 1 ½"	6.000	T31M-250150PL	T31M-250150PM
2½" x 2"	4.250	T31M-250200PL	T31M-250200PM
3" x 1"	10.000	T31M-300100PL	T31M-300100PM
3" x 1½"	8.000	T31M-300150PL	T31M-300150PM
3" x 2"	6.250	T31M-300200PL	T31M-300200PM
3" x 2½"	4.250	T31M-300250PL	T31M-300250PM
4" x 1"	14.125	T31M-400100PL	T31M-400100PM
4" x 1½"	12.125	T31M-400150PL	T31M-400150PM
4" x 2"	10.375	T31M-400200PL	T31M-400200PM
4" x 2½"	8.375	T31M-400250PL	T31M-400250PM
4" x 3"	6.375	T31M-400300PL	T31M-400300PM
6" x 3"	9.000	T31M-600300PL	T31M-600300PM
6" x 4"	9.000	T31M-600400PL	T31M-600400PM

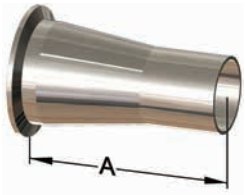

BPE Table DT-4.1.3-2(a)

Note: Not all sizes and finishes are stocked

PL Finish – SF1
OD = 32R_a Mechanically Polished
ID = 20R_a Mechanically Polished

PM Finish – SF4
OD = 32R_a Mechanically Polished
ID = 15R_a Mechanically Polished and Electropolished

NEW FOR 2013

Bradford™ High Purity
BioPharm Line

Clamp x Clamp Concentric Reducers - T3114MP

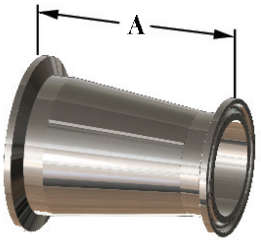

BPE Table DT-4.1.3-3(a)

Size	A	PL Finish - SF1	PM Finish - SF4
¾" x ½"	2.000	T3114MP075050PL	T3114MP075050PM
1" x ½"	2.500	T3114MP100050PL	T3114MP100050PM
1" x ¾"	2.000	T3114MP100075PL	T3114MP100075PM
1½" x ½"	3.500	T3114MP150050PL	T3114MP150050PM
1½" x ¾"	3.000	T3114MP150075PL	T3114MP150075PM
1½" x 1"	3.000	T3114MP150100PL	T3114MP150100PM
2" x ½"	5.500	T3114MP200050PL	T3114MP200050PM
2" x ¾"	5.000	T3114MP200075PL	T3114MP200075PM
2" x 1"	5.000	T3114MP200100PL	T3114MP200100PM
2" x 1½"	3.000	T3114MP200150PL	T3114MP200150PM
2½" x ½"	7.500	T3114MP250050PL	T3114MP250050PM
2½" x ¾"	7.000	T3114MP250075PL	T3114MP250075PM
2½" x 1"	7.000	T3114MP250100PL	T3114MP250100PM
2½" x 1 ½"	5.000	T3114MP250150PL	T3114MP250150PM
2½" x 2"	3.000	T3114MP250200PL	T3114MP250200PM
3" x 1"	9.000	T3114MP300100PL	T3114MP300100PM
3" x 1½"	7.000	T3114MP300150PL	T3114MP300150PM
3" x 2"	5.000	T3114MP300200PL	T3114MP300200PM
3" x 2½"	3.000	T3114MP300250PL	T3114MP300250PM
4" x 1"	13.125	T3114MP400100PL	T3114MP400100PM
4" x 1½"	11.125	T3114MP400150PL	T3114MP400150PM
4" x 2"	9.125	T3114MP400200PL	T3114MP400200PM
4" x 2½"	7.125	T3114MP400250PL	T3114MP400250PM
4" x 3"	5.125	T3114MP400300PL	T3114MP400300PM
6" x 3"	7.625	T3114MP600300PL	T3114MP600300PM
6" x 4"	7.625	T3114MP600400PL	T3114MP600400PM

Weld x Weld Eccentric Reducers - T32W

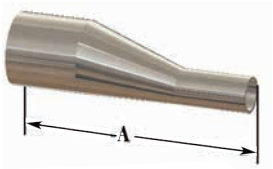

BPE Table DT-4.1.3-1(a)

Size	A	PL Finish - SF1	PM Finish - SF4
¾" x ½"	4.000	T32W-075050PL	T32W-075050PM
1" x ½"	4.500	T32W-100050PL	T32W-100050PM
1" x ¾"	4.000	T32W-100075PL	T32W-100075PM
1½" x ½"	5.500	T32W-150050PL	T32W-150050PM
1½" x ¾"	5.000	T32W-150075PL	T32W-150075PM
1½" x 1"	5.000	T32W-150100PL	T32W-150100PM
2" x ½"	7.750	T32W-200050PL	T32W-200050PM
2" x ¾"	7.250	T32W-200075PL	T32W-200075PM
2" x 1"	7.250	T32W-200100PL	T32W-200100PM
2" x 1½"	5.250	T32W-200150PL	T32W-200150PM
2½" x ½"	9.750	T32W-250050PL	T32W-250050PM
2½" x ¾"	9.250	T32W-250075PL	T32W-250075PM
2½" x 1"	9.250	T32W-250100PL	T32W-250100PM
2½" x 1 ½"	7.250	T32W-250150PL	T32W-250150PM
2½" x 2"	5.500	T32W-250200PL	T32W-250200PM
3" x 1"	11.250	T32W-300100PL	T32W-300100PM
3" x 1½"	9.250	T32W-300150PL	T32W-300150PM
3" x 2"	7.500	T32W-300200PL	T32W-300200PM
3" x 2½"	5.500	T32W-300250PL	T32W-300250PM
4" x 1"	15.500	T32W-400100PL	T32W-400100PM
4" x 1½"	13.500	T32W-400150PL	T32W-400150PM
4" x 2"	11.750	T32W-400200PL	T32W-400200PM
4" x 2½"	9.750	T32W-400250PL	T32W-400250PM
4" x 3"	7.750	T32W-400300PL	T32W-400300PM
6" x 3"	9.750	T32W-600300PL	T32W-600300PM
6" x 4"	10.000	T32W-600400PL	T32W-600400PM

Note: Not all sizes and finishes are stocked

PL Finish – SF1
OD = 32R_a Mechanically Polished
ID = 20R_a Mechanically Polished

PM Finish – SF4
OD = 32R_a Mechanically Polished
ID = 15R_a Mechanically Polished and Electropolished

Bradford™ High Purity
BioPharm Line

NEW FOR 2013

Clamp x Weld Eccentric Reducers - T32M

Size	A	PL Finish - SF1	PM Finish - SF4
¾" x ½"	3.000	T32M-075050PL	T32M-075050PM
1" x ½"	3.500	T32M-100050PL	T32M-100050PM
1" x ¾"	3.000	T32M-100075PL	T32M-100075PM
1½" x ½"	4.500	T32M-150050PL	T32M-150050PM
1½" x ¾"	4.000	T32M-150075PL	T32M-150075PM
1½" x 1"	4.000	T32M-150100PL	T32M-150100PM
2" x ½"	6.500	T32M-200050PL	T32M-200050PM
2" x ¾"	6.000	T32M-200075PL	T32M-200075PM
2" x 1"	6.000	T32M-200100PL	T32M-200100PM
2" x 1½"	4.000	T32M-200150PL	T32M-200150PM
2½" x ½"	8.500	T32M-250050PL	T32M-250050PM
2½" x ¾"	8.000	T32M-250075PL	T32M-250075PM
2½" x 1"	8.000	T32M-250100PL	T32M-250100PM
2½" x 1 ½"	6.000	T32M-250150PL	T32M-250150PM
2½" x 2"	4.250	T32M-250200PL	T32M-250200PM
3" x 1"	10.000	T32M-300100PL	T32M-300100PM
3" x 1½"	8.000	T32M-300150PL	T32M-300150PM
3" x 2"	6.250	T32M-300200PL	T32M-300200PM
3" x 2½"	4.250	T32M-300250PL	T32M-300250PM
4" x 1"	14.125	T32M-400100PL	T32M-400100PM
4" x 1½"	12.125	T32M-400150PL	T32M-400150PM
4" x 2"	10.375	T32M-400200PL	T32M-400200PM
4" x 2½"	8.375	T32M-400250PL	T32M-400250PM
4" x 3"	6.375	T32M-400300PL	T32M-400300PM
6" x 3"	8.750	T32M-600300PL	T32M-600300PM
6" x 4"	9.000	T32M-600400PL	T32M-600400PM

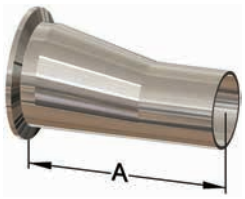

BPE Table DT-4.1.3-2(a)

Clamp x Clamp Eccentric Reducers - T3214MP

Size	A	PL Finish - SF1	PM Finish - SF4
¾" x ½"	2.000	T3214MP075050PL	T3214MP075050PM
1" x ½"	2.500	T3214MP100050PL	T3214MP100050PM
1" x ¾"	2.000	T3214MP100075PL	T3214MP100075PM
1½" x ½"	3.500	T3214MP150050PL	T3214MP150050PM
1½" x ¾"	3.000	T3214MP150075PL	T3214MP150075PM
1½" x 1"	3.000	T3214MP150100PL	T3214MP150100PM
2" x ½"	5.500	T3214MP200050PL	T3214MP200050PM
2" x ¾"	5.000	T3214MP200075PL	T3214MP200075PM
2" x 1"	5.000	T3214MP200100PL	T3214MP200100PM
2" x 1½"	3.000	T3214MP200150PL	T3214MP200150PM
2½" x ½"	7.500	T3214MP250050PL	T3214MP250050PM
2½" x ¾"	7.000	T3214MP250075PL	T3214MP250075PM
2½" x 1"	7.000	T3214MP250100PL	T3214MP250100PM
2½" x 1 ½"	5.000	T3214MP250150PL	T3214MP250150PM
2½" x 2"	3.000	T3214MP250200PL	T3214MP250200PM
3" x 1"	9.000	T3214MP300100PL	T3214MP300100PM
3" x 1½"	7.000	T3214MP300150PL	T3214MP300150PM
3" x 2"	5.000	T3214MP300200PL	T3214MP300200PM
3" x 2½"	3.000	T3214MP300250PL	T3214MP300250PM
4" x 1"	13.125	T3214MP400100PL	T3214MP400100PM
4" x 1½"	11.125	T3214MP400150PL	T3214MP400150PM
4" x 2"	9.125	T3214MP400200PL	T3214MP400200PM
4" x 2½"	7.125	T3214MP400250PL	T3214MP400250PM
4" x 3"	5.125	T3214MP400300PL	T3214MP400300PM
6" x 3"	7.500	T3214MP600300PL	T3214MP600300PM
6" x 4"	7.625	T3214MP600400PL	T3214MP600400PM

BPE Table DT-4.1.3-3(a)

Note: Not all sizes and finishes are stocked

PL Finish – SF1
OD = 32R_a Mechanically Polished
ID = 20R_a Mechanically Polished

PM Finish – SF4
OD = 32R_a Mechanically Polished
ID = 15R_a Mechanically Polished and Electropolished

NEW FOR 2013

Bradford™ High Purity
BioPharm Line

Solid End Caps - T16AMP

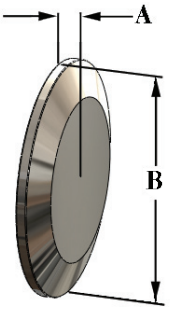

BPE Table DT-4.1.5-2

Size	A	B	PL Finish - SF1	PM Finish - SF4
½" - ¾"	0.190	1.000	***T16AMP-050075PL***	***T16AMP-050075PM***
1" - 1½"	0.250	1.990	***T16AMP-100150PL***	***T16AMP-100150PM***
2"	0.250	2.520	***T16AMP-200PL***	***T16AMP-200PM***
2½"	0.250	3.050	***T16AMP-250PL***	***T16AMP-250PM***
3"	0.250	3.580	***T16AMP-300PL***	***T16AMP-300PM***
4"	0.310	4.690	***T16AMP-400PL***	***T16AMP-400PM***
6"	0.440	6.560	***T16AMP-600PL***	***T16AMP-600PM***

Auto Weld Ferrules - TL14AM7

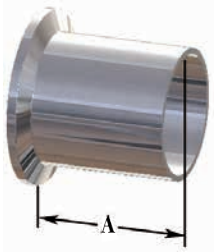

BPE Table DT-4.1.4-1

Size	A	PL Finish - SF1	PM Finish - SF4
½"	1.750	***TL14AM7-050PL***	***TL14AM7-050PM***
¾"	1.750	***TL14AM7-075PL***	***TL14AM7-075PM***
1"	1.750	***TL14AM7-100PL***	***TL14AM7-100PM***
1½"	1.750	***TL14AM7-150PL***	***TL14AM7-150PM***
2"	2.250	***TL14AM7-200PL***	***TL14AM7-200PM***
2½"	2.250	***TL14AM7-250PL***	***TL14AM7-250PM***
3"	2.250	***TL14AM7-300PL***	***TL14AM7-300PM***
4"	2.250	***TL14AM7-400PL***	***TL14AM7-400PM***
6"	3.000	***TL14AM7-600PL***	***TL14AM7-600PM***

Weld Caps - T16W

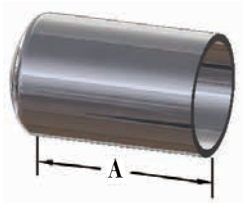

BPE Table DT-4.1.5-1

Size	A	PL Finish - SF1	PM Finish - SF4
½"	1.500	***T16W-050PL***	***T16W-050PM***
¾"	1.500	***T16W-075PL***	***T16W-075PM***
1"	1.500	***T16W-100PL***	***T16W-100PM***
1½"	1.500	***T16W-150PL***	***T16W-150PM***
2"	1.500	***T16W-200PL***	***T16W-200PM***
2½"	1.500	***T16W-250PL***	***T16W-250PM***
3"	1.500	***T16W-300PL***	***T16W-300PM***
4"	2.000	***T16W-400PL***	***T16W-400PM***
6"	2.500	***T16W-600PL***	***T16W-600PM***

Note: Not all sizes and finishes are stocked

PL Finish – SF1
OD = 32R_a Mechanically Polished
ID = 20R_a Mechanically Polished

PM Finish – SF4
OD = 32R_a Mechanically Polished
ID = 15R_a Mechanically Polished and Electropolished

Bradford™ High Purity
BioPharm Line

NEW FOR 2013

Clamp Adapter x Male NPT - T21MP

Size	A	PL Finish - SF1
1/2" x 1/4"	2.000	***T21MP-050025PL***
1/2" x 3/8"	2.000	***T21MP-050375PL***
1/2"	1.625	***T21MP-050PL***
1/2" x 3/4"	2.000	***T21MP-050075PL***
3/4" x 1/4"	2.000	***T21MP-075025PL***
3/4" x 3/8"	2.000	***T21MP-075375PL***
3/4" x 1/2"	2.000	***T21MP-075050PL***
3/4"	2.250	***T21MP-075PL***
1"	2.250	***T21MP-100PL***
1-1/2"	2.250	***T21MP-150PL***
2"	2.638	***T21MP-200PL***
2-1/2"	2.875	***T21MP-250PL***
3"	3.070	***T21MP-300PL***
4"	3.155	***T21MP-400PL***

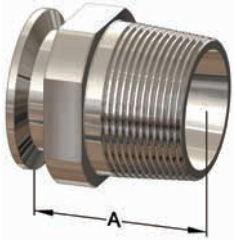

Clamp Adapter x Female NPT - T22MP

Size	A	PL Finish - SF1
1/2" x 1/8"	1.250	***T22MP-050125PL***
1/2" x 1/4"	1.500	***T22MP-050025PL***
1/2" x 3/8"	1.500	***T22MP-050375PL***
1/2"	1.500	***T22MP-050PL***
1/2" x 3/4"	1.500	***T22MP-050075PL***
3/4" x 1/4"	1.500	***T22MP-075025PL***
3/4" x 3/8"	1.500	***T22MP-075375PL***
3/4" x 1/2"	1.625	***T22MP-075050PL***
3/4"	1.625	***T22MP-075PL***
1"	1.625	***T22MP-100PL***
1-1/2"	2.250	***T22MP-150PL***
2"	2.406	***T22MP-200PL***
2-1/2"	2.187	***T22MP-250PL***
3"	2.187	***T22MP-300PL***
4"	3.652	***T22MP-400PL***

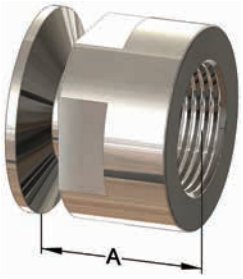

Stub Adapters - T14VB

Size	A	B	PL Finish - SF1
½"	2.000	1.625	***T14VB-050PL***
¾"	2.000	1.687	***T14VB-075PL***
1"	2.000	2.000	***T14VB-100PL***
1½"	2.000	2.875	***T14VB-150PL***
2"	2.500	2.625	***T14VB-200PL***
2½"	2.500	4.125	***T14VB-250PL***
3"	2.500	5.000	***T14VB-300PL***
4"	2.500	6.187	***T14VB-400PL***
6"	3.000	8.500	***T14VB-600PL***

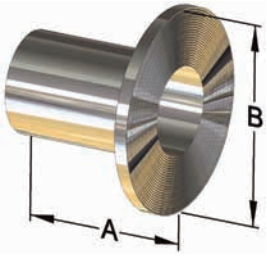

All Fittings Comply with ASME BPE-2012 - Table DT-3-1 Final Tolerances for Mechanically Polished Fittings and Process Components (inches)

NEW FOR 2013

Nominal Size	OD	Wall Thickness	Squareness Face to Tangent (B)	Off Angle (O)	Tolerance on End-to-End (E) and Center-to-End (A)	Off Plane (P)
½"	±0.005	+0.005/-0.008	0.005	0.014	0.050	0.030
¾"	±0.005	+0.005/-0.008	0.005	0.018	0.050	0.030
1"	±0.005	+0.005/-0.008	0.008	0.025	0.050	0.030
1½"	±0.008	+0.005/-0.008	0.008	0.034	0.050	0.050
2"	±0.008	+0.005/-0.008	0.008	0.043	0.050	0.050
2½"	±0.010	+0.005/-0.008	0.010	0.054	0.050	0.050
3"	±0.010	+0.005/-0.008	0.016	0.068	0.050	0.050
4"	±0.015	+0.008/-0.010	0.016	0.086	0.050	0.060

Squareness to Face

Off Angle

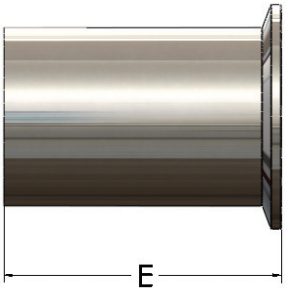

End-to-End

Off Plane

Off Angle

Center-to-End

Technical Specifications

NEW FOR 2013

Weld End chemical analysis (%) per ASME BPE 2101 Table Min - 2.1-1

Element	C	Mn	P	S	Si	Cr	Ni	Mo
minimum	---	---	---	0.005	---	16.00	10.00	2.00
maximum	0.030	2.00	0.045	0.017	1.00	18.00	15.00	3.00

BPE Surface Finish Requirements (SF-3)

Surface designation	Mechanically Polished ID and OD		Bradford™ High Purity code
	R_a Maximum		
	ID µ-in.	OD µ-in	
SF0	no finish requirement	no finish requirement	
SF1	20	32	***PL***
SF2	25	32	
SF3	30	32	

Surface designation	Mechanically Polished OD and Electropolished ID		
	R_a Maximum		
	ID µ-in.	OD µ-in	
SF4	15	32	***PM***
SF5	20	32	
SF6	25	32	

Acceptance Criteria for Stainless Steel Mechanically Polished Product Contact Surface Finishes

Anomaly or Indication	Acceptance Criteria
Pits	If diameter <0.020" and bottom is shiny [Notes (2) and (4)]. Pits <0.003" Diameter is irrelevant and acceptable.
Cluster of pits	No more than 4 pits per each ½" x ½" inspection window. The cumulative total of all relevant pits shall not exceed 0.040".
Dents	None accepted [note (1)]
Finishing marks	If R_a maximum is met
Welds	As welded shall meet requirements of MJ-6. If welds are finished, then shall be smooth and blended.
Nicks	None accepted
Scratches	For tubing, if cumulative length is <12.0" per 20' tube length or prorated and if depth is <0.003" For fittings, valves and other process components, if length is <0.25" cumulatively, depth <0.003" and R_a max. is met. For vessels, if length <0.50" at 0.003 depth and if <3 per inspection window [Note (3)].
Surface cracks	None accepted
Surface inclusions	If R_a max. is met
Surface residuals	None accepted, visual inspection
Surface roughness (R_a)	See Table SF-3 (see above)
Weld slag	For tubing, up to 3 per 20' length or prorated, if <75% of the width of the weld bead. For fittings, valves, vessels and other process components, none accepted (as welded shall meet the requirements of MJ-6 and Table MJ-3).
Porosity	None open to the surface

Notes:
1. For vessels, dents in the area covered by and resulting from welding dimple heat transfer jackets are acceptable.
2. Black bottom pit of any depth is not acceptable.
3. An inspection window is defined as an area 4" x 4"
4. Pits in super-austenitic and nickel alloys may exceed this value. Acceptance criteria for pit size shall be established by agreement between owner/user and manufacturer. All other pit criteria remain the same.

NEW FOR 2013

Packaging

Product markings per ASME BPE 2012 DT-10.1

- Bradford™
- job number
- 316L
- Bradford™ part number
- heat number(s)
- surface finish code
- ASME BPE

Per the specification, the size of the fitting may limit the space available for markings. When that occurs, the markings starting at the bottom of the list are not applied. The Bradford™ part number will describe the part configuration and size.

MTR certifications are included inside the resealable bag with each fitting. The MTRs are traceable through the Job Number found on each fitting. All fittings are capped to prevent damage and contamination. For easy identification each finish will have a different color cap.

Finish *	Color Caps
PL/SF1	blue
PM/SF4	white

* see page 99 for finish standards

Bradford™ High Purity

BioPharm Fittings

316L Stainless Steel Material Test Report

Job Number	AA729

Bradford™ Part Number	Description	Size	Surface finish
T2S88-150PL	Automatic Weld 88° Elbow per Table DT-4.1.1-1	1½"	SF1 (20Ra)

Chemical analysis (%) per ASME BPE 2012 Table MM-2.1 and Section MM-5.1.1

Item	Heat number	C	Mn	P	S	Si	Cr	Ni	Mo	
					0.005		16.00	10.00	2.00	min.
		0.030	2.00	0.045	0.017	1.00	18.00	15.00	3.00	max.
1	96GK43	0.017	1.56	0.028	0.011	0.33	16.80	10.05	2.02	

Mechanical Test Results

Item	Yield Strength (0.2%), MPa	Tensile Strength, MPa	Elongation, %	Hardness, HRB	Specification
	170 minimum	485 minimum	35 minimum	90 maximum	
1	327	634	47.0	82	ASTM A269-10

Product of Thailand

We certify that the above is a true copy of the test results issued by the material supplier. This MTR conforms to EN10204-3.1. All fittings supplied by Dixon Sanitary conform to the requirements of the European Union Directive 2002/95/EC on the restriction of the use of certain hazardous substances in electrical and electronic equipment (RoHS).

Bruce Anderson
Technical Director

Dixon Sanitary
N25 W23040 Paul Rd.
Pewaukee, WI 53072
USA
800-789-1718
bradfordfittings.com

DIXON
The Right Connection™

Bradford™ Tubing

Product Specifications

Size range:
- ½" - 6" OD tube

Materials:
- G = 304 stainless steel
- R = 316L stainless steel

Finish:
- 3A sanitary finish ID and OD
- unpolished
- BPE finishes are available

Tube OD	Nominal Wall Thickness	Gage Number	Wt. Pounds per Ft.
½"	.065	16	0.31
¾"	.065	16	0.49
1"	.065	16	0.67
1½"	.065	16	1.02
2"	.065	16	1.36
2½"	.065	16	1.71
3"	.065	16	2.06
4"	.083	14	3.45
6"	.109	12	6.92

Notes:
- tubing available in 20' lengths only
- surcharges change MONTHLY
- broken box charges will apply
- tubing only ships via truck
- call Dixon Sanitary for pricing and full freight allowance
- other sizes may be available, call Dixon Sanitary for information
- tubing is NOT returnable

Operating Pressures

304 Stainless Steel Tube

Tube OD Size	Nominal Wall Thickness	Pressure (**PSI**)		
		working	*yield*	*burst*
½"	.065	4,870	7,800	19,500
¾"	.065	3,250	5,200	13,000
1"	.065	2,440	3,900	9,800
1½"	.065	1,630	2,600	6,500
2"	.065	1,220	2,000	4,900
2½"	.065	980	1,600	3,900
3"	.065	810	1,300	3,300
4"	.083	780	1,200	3,100
6"	.109	680	1,090	2,720

The pressures shown in the table above are calculated using Barlow's Formula and the following properties:
- material: 304
- yield strength (PSI): 30,000
- tensile strength (PSI): 75,000

Working Pressure = ¼ of Burst Pressure, these calculate from **-20°F** to **100°F**.

316L Stainless Steel Tube

Tube OD Size	Nominal Wall Thickness	Pressure (**PSI**)		
		working	*yield*	*burst*
½"	.065	3,250	6,500	19,500
¾"	.065	2,167	4,330	13,000
1"	.065	2,280	3,300	9,100
1½"	.065	1,520	2,200	6,100
2"	.065	1,140	1,600	4,600
2½"	.065	910	1,300	3,600
3"	.065	760	1,100	3,000
4"	.083	730	1,000	2,900
6"	.109	635	900	2,540

The pressures shown in the table above are calculated using Barlow's Formula and the following properties:
- material: 316L
- yield strength (PSI): 25,000
- tensile strength (PSI): 70,000

Working Pressure = ¼ of Burst Pressure, these calculate from **-20°F** to **100°F**.

Pipe size and Tube OD size materials are not interchangable

Index

A270 tubing 102
A269 tubing 102
Wall Flanges 103

ASTM-A270 Polished ID and OD Tubing

Polished ID and OD - *ASTM-A270*

Size	Packaged	*304 Stainless Steel* Part Number	*316L Stainless Steel* Part Number
½"	100'	---	***A270-R50P***
¾"	100'	---	***A270-R75P***
1"	280'	***A270-G100P***	***A270-R100P***
1½"	340'	***A270-G150P***	***A270-R150P***
2"	340'	***A270-G200P***	***A270-R200P***
2½"	220'	***A270-G250P***	***A270-R250P***
3"	220'	***A270-G300P***	***A270-R300P***
4"	100'	***A270-G400P***	***A270-R400P***
6"	40'	***A270-G600P***	***A270-R600P***

Tolerances for Welded Tubing - *ASTM-A270*

Tube OD Size	Nominal Wall Thickness	OD Tolerance	Wall Thickness Tolerance	Ovality Allowance
½"	.065	+ .002 / - .008	± .008	± .010
¾"	.065	+ .002 / - .008	± .008	± .010
1"	.065	+ .002 / - .008	± .008	± .010
1½"	.065	+ .002 / - .008	± .008	± .020
2"	.065	+ .002 / - .011	± .008	± .020
2½"	.065	+ .002 / - .011	± .008	± .020
3"	.065	+ .003 / - .012	± .008	± .020
4"	.083	+ .003 / - .015	± .010	± .020
6"	.109	+ .030 / - .030	± .014	± .030

Features:
- ASTM-A270-02 welded austenitic stainless steel sanitary tubing

ASTM-A269 Unpolished ID and OD Tubing

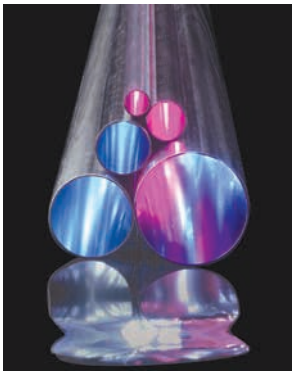

Unpolished ID and OD - *ASTM-A269*

Size	Packaged	*304 Stainless Steel* Part Number	*316 Stainless Steel* Part Number
1"	280'	***A269-G100U***	***A269-R100U***
1½"	340'	***A269-G150U***	***A269-R150U***
2"	340'	***A269-G200U***	***A269-R200U***
2½"	220'	***A269-G250U***	***A269-R250U***
3"	220'	***A269-G300U***	***A269-R300U***
4"	100'	***A269-G400U***	***A269-R400U***
6"	40'	***A269-G600U***	***A269-R600U***

Tolerances for Welded Tubing - *ASTM-A269*

Tube OD Size	Nominal Wall Thickness	OD Tolerance	Wall Thickness Tolerance	Ovality Allowance
1"	.065	± .005	± .006	± .010
1½"	.065	± .010	± .006	± .020
2"	.065	± .010	± .006	± .020
2½"	.065	± .010	± .006	± .020
3"	.065	± .010	± .006	± .020
4"	.083	± .015	± .008	± .030
6"	.109	± .030	± .010	± .030

Features:
- ASTM-A269-02 welded austenitic stainless steel sanitary tubing for general service
- other sizes and materials available, call Dixon Sanitary for information

Wall Flanges

Flanges - *B25*

Tube OD	A [1]	B	Wall Thickness	*304 Stainless Steel* Part Number
½"	.50	3.00	.065	***B25-G050300***
½"	.50	5.00	.065	***B25-G050500***
¾"	.75	3.00	.065	***B25-G075300***
¾"	.75	5.00	.065	***B25-G075500***
1"	1.00	3.00	.065	***B25-G100300***
1"	1.00	5.00	.065	***B25-G100500***
1½"	1.50	5.00	.065	***B25-G150500***
2"	2.00	5.00	.065	***B25-G200500***
2½"	2.50	5.00	.065	***B25-G250500***
3"	3.00	6.00	.065	***B25-G300600***
4"	4.00	7.00	.065	***B25-G400700***
5"	5.00	8.00	.065	***B25-G500800***
6"	6.00	10.00	.065	***B25-G6001000***
8"	8.00	12.00	.065	***B25-G8001200***
10"	10.00	14.00	.065	***B25-G10001400***
12"	12.00	16.00	.065	***B25-G12001600***

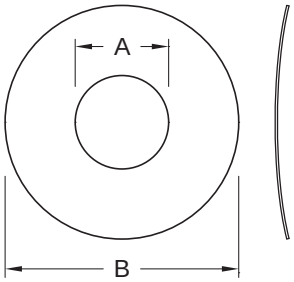

[1] Square wall flanges are also available, call Dixon Sanitary for information.

Bradford™ Tube Hangers

Complete Support

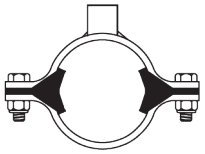

round hanger with coupler

hex hanger

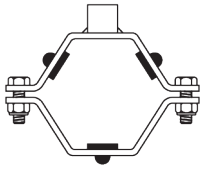

hex hanger with coupler

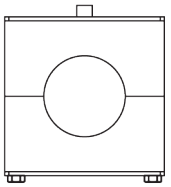

block hanger

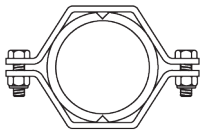

hex hanger with sleeve

Product Specifications

Size range:
- ½" - 12" OD tube

Materials:
- hanger base: 304 stainless steel
- hanger inserts: nitrile..... rated to: 230°F
  ABS (sleeve) ..... 230°F
  FKM..... 400°F
  Polypropylene ..... 212°F
  Santoprene™ ..... 302°F

Tube OD *	Nominal Wall Thickness	Gage Number
½"	.065	16
¾"	.065	16
1"	.065	16
1½"	.065	16
2"	.065	16
2½"	.065	16
3"	.065	16
4"	.083	14
5"	.109	12
6"	.109	12
8"	.120	10
10"	.109	12
12"	.120	10

Support Recommendations

Lines are not to be rigidly anchored to equipment. Lines must be allowed to float. Temperatures cause expansion and contraction and if mounted incorrectly will cause distortion and possibly leakage.

Proper Installation:
- straight sections need support every 10 feet
- each side of every valve (as close as possible to the connection) needs support
- support each change of directions

Index

Hex Hangers.....105-107
Grommets.....106
Nuts and Bolts 106
Sleeves.....107
Round Hangers 107
Block Hangers 108

Tube Hex Hangers

Hex Hanger with Nitrile Grommets - *B24RG*

Features:

- Nitrile grommets maximum temperature: **230°F**
- All hex and round style hangers can be equipped with the following coupler options:
  - 3/8 NPT
  - all thread: 3/8-16 or 1/2-13

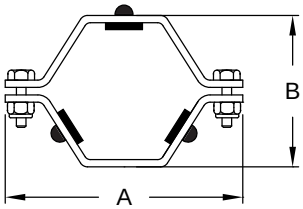

Tube OD	A	B	*304 Stainless Steel* Part Number
½" - ¾"	3.425	1.450	***B24RG-G75***
1"	3.425	1.450	***B24RG-G100***
1½"	4.000	2.125	***B24RG-G150***
2"	4.500	2.500	***B24RG-G200***
2½"	4.950	3.125	***B24RG-G250***
3"	5.500	3.750	***B24RG-G300***
4"	6.950	4.750	***B24RG-G400***
5"	8.000	5.625	***B24RG-G500***
6"	9.250	6.625	***B24RG-G600***
8"	11.500	8.625	***B24RG-G800***
10"	14.500	10.500	***B24RG-G1000***
12"	16.750	12.625	***B24RG-G1200***

Hex Hanger with FKM Grommets - *B24RGSFY*

Features:

- FKM grommets maximum temperature: **392°F**
- All hex and round style hangers can be equipped with the following coupler options:
  - 3/8 NPT
  - all thread: 3/8-16 or 1/2-13

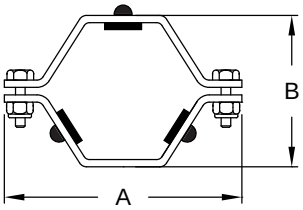

Tube OD	A	B	*304 Stainless Steel* Part Number
½"	3.625	2.125	***B24RGSFY-G50***
¾"	3.625	2.125	***B24RGSFY-G75***
1"	3.625	2.125	***B24RGSFY-G100***
1½"	3.625	2.125	***B24RGSFY-G150***
2"	4.313	2.625	***B24RGSFY-G200***
2½"	4.875	3.125	***B24RGSFY-G250***
3"	5.375	3.625	***B24RGSFY-G300***
4"	6.563	4.750	***B24RGSFY-G400***
6"	9.000	6.625	***B24RGSFY-G600***
8"	11.250	8.750	***B24RGSFY-G800***
10"	14.500	10.500	***B24RGSFY-G1000***
12"	16.750	12.625	***B24RGSFY-G1200***

Hex Hanger with Nitrile Grommets and Coupler - *B24RGC*

Features:

- Nitrile grommets maximum temperature: **230°F**
- Coupler has 3/8 NPT

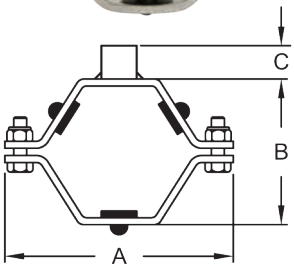

Tube OD	A	B	C	*304 Stainless Steel* Part Number
½" - ¾"	3.425	1.450	.750	***B24RGC-G75***
1"	3.425	1.450	.750	***B24RGC-G100***
1½"	4.000	2.125	.750	***B24RGC-G150***
2"	4.500	2.500	.750	***B24RGC-G200***
2½"	4.750	3.125	.750	***B24RGC-G250***
3"	5.500	3.750	.750	***B24RGC-G300***
4"	6.750	4.750	.750	***B24RGC-G400***
6"	9.250	6.625	.750	***B24RGC-G600***
8"	11.500	8.625	.750	***B24RGC-G800***

Tube Hex Hangers

Hex Hanger with Nitrile Grommets and All Thread Coupler - *B24RGC16*

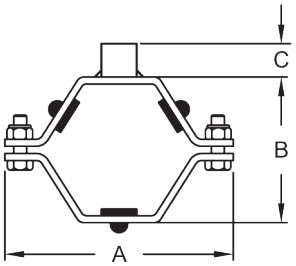

Features:
- Nitrile grommets maximum temperature: **230°F**
- Coupler is all thread 3/8-16

Tube OD	A	B	C	*304 Stainless Steel* Part Number
½" - ¾"	3.425	1.450	.750	***B24RGC16-G75***
1"	3.425	1.450	.750	***B24RGC16-G100***
1½"	4.000	2.125	.750	***B24RGC16-G150***
2"	4.500	2.500	.750	***B24RGC16-G200***
2½"	4.750	3.125	.750	***B24RGC16-G250***
3"	5.500	3.750	.750	***B24RGC16-G300***
4"	6.750	4.750	.750	***B24RGC16-G400***
6"	9.250	6.625	.750	***B24RGC16-G600***
8"	11.500	8.625	.750	***B24RGC16-G800***

Nuts and Bolts - *13NHN*

Features:
- All sizes hex hangers with grommets and round hangers 1" to 4" use 13NHN-G100-600 fastener sets
- ½" and ¾" round and sleeved hangers use 13NHN-G75 fastener sets
- 2 nuts and bolts supplied to a set

Size	Description	*304 Stainless Steel* Part Number
½" - ¾"	1/4-20 x 3/4" bolt with nylock nut	***13NHN-G75***
1" - 12"	5/16-18 x 1" bolt with nylock nut	***13NHN-G100-600***

Grommets - *13RG*

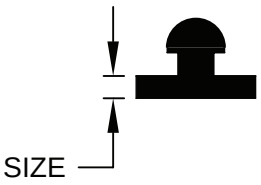

Features:
- Nitrile grommets maximum temperature: **230°F**
- FKM grommets maximum temperature: **392°F**

Size	*Nitrile* Part Number	*FKM* Part Number
1/8" [1]	***13RG18***	***13RGV18***
1/4"	***13RG14***	***13RGV14***
1/2"	***13RG12***	***13RGV12***
3/8" [2]	***13RG38***	***13RGV38***
5/8"	***13RG58***	***13RGV58***

[1] for 1" hangers and larger
[2] for ½" and ¾" hangers

Tube Hex Hangers

Hex Hanger with ABS Sleeve - *B24PS*

Feature:
- ABS sleeve maximum temperature: **230°F**

Tube OD	A	B	*304 Stainless Steel* Part Number
½"	2.800	1.150	***B24PS-G50***
¾"	2.800	1.150	***B24PS-G75***
1"	3.425	1.450	***B24PS-G100***
1½"	4.000	2.125	***B24PS-G150***
2"	4.500	2.500	***B24PS-G200***
2½"	4.950	3.125	***B24PS-G250***
3"	5.500	3.750	***B24PS-G300***
4"	6.950	4.750	***B24PS-G400***
5"	8.063	5.625	***B24PS-G500***
6"	9.250	6.625	***B24PS-G600***
8"	11.500	8.625	***B24PS-G800***
10"	14.500	10.500	***B24PS-G1000***
12"	16.625	13.000	***B24PS-G1200***

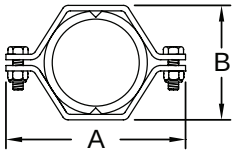

Hex Hanger with High Temperature Sleeve - *B24HS*

Feature:
- High temperature sleeve maximum temperature: **325°F**

Tube OD	A	B	*304 Stainless Steel* Part Number
½"	2.375	1.062	***B24HS-G50***
¾"	2.625	1.188	***B24HS-G75***
1"	2.688	1.563	***B24HS-G100***
1½"	3.625	2.125	***B24HS-G150***
2"	4.625	2.625	***B24HS-G200***
2½"	4.813	3.125	***B24HS-G250***
3"	5.375	3.625	***B24HS-G300***
4"	6.625	4.625	***B24HS-G400***
6"	9.000	6.625	***B24HS-G600***

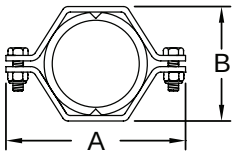

K
Tube Hangers

Sleeves - *13*S*

Features:
- ABS sleeve maximum temperature: **230°F**
- High temperature sleeve maximum temperature: **325°F**

Size	*ABS* Part Number	*High Temperature* Part Number
½"	***13PS-50***	***13HS-50***
¾"	***13PS-75***	***13HS-75***
1"	***13PS-100***	***13HS-100***
1½"	***13PS-150***	***13HS-150***
2"	***13PS-200***	***13HS-200***
2½"	***13PS-250***	***13HS-250***
3"	***13PS-300***	***13HS-300***
4"	***13PS-400***	***13HS-400***
5"	***13PS-500***	***---***
6"	***13PS-600***	***13HS-600***
8"	***13PS-800***	***---***
10"	***13PS-1000***	***---***
12"	***13PS-1200***	***---***

Round Hanger with Nitrile Inserts - *B24RPH*

Features:
- Nitrile inserts maximum temperature: **230°F**
- All hex and round style hangers can be equipped with the following coupler options: 3/8 NPT or all thread: 3/8-16 or 1/2-13

Tube OD	A	B	*304 Stainless Steel* Part Number
½"	2.750	1.125	***B24RPH-G50***
¾"	2.750	1.125	***B24RPH-G75***
1"	3.310	1.500	***B24RPH-G100***
1½"	3.810	2.000	***B24RPH-G150***
2"	4.250	2.562	***B24RPH-G200***
2½"	5.000	3.000	***B24RPH-G250***
3"	5.500	3.562	***B24RPH-G300***
4"	6.500	4.688	***B24RPH-G400***

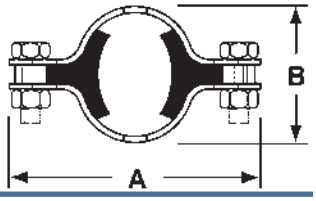

Tube Block Hangers

Features:

- Santoprene (SP) - FDA approved material, maximum temperature **302°F**
- Polypropylene (PP) - maximum temperature **212°F**

Block Hanger with Hang Plate Design - *B24**HAP*

Polypropylene

Santoprene

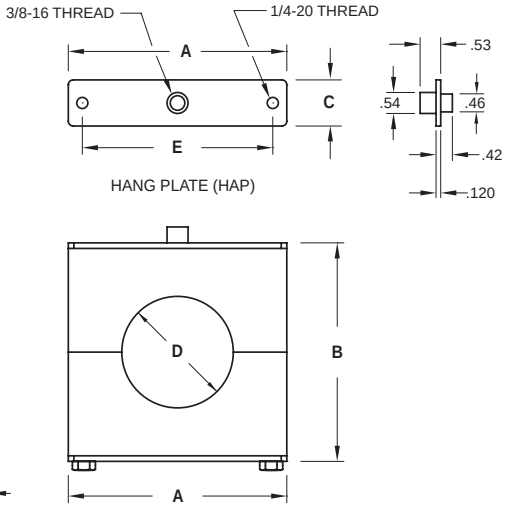

Tube OD	A	B	C	D	E	*Polypropylene* Part Number	*Santoprene* Part Number
½"	1.84	1.70	1.19	0.50	1.33	***B24PPHAP-G50***	***B24SPHAP-G50***
¾"	1.84	1.70	1.19	0.75	1.33	***B24PPHAP-G75***	***B24SPHAP-G75***
1"	3.33	2.85	1.19	1.00	2.55	***B24PPHAP-G100***	***B24SPHAP-G100***
1½"	3.33	2.85	1.19	1.50	2.55	***B24PPHAP-G150***	***B24SPHAP-G150***
2"	3.33	2.85	1.19	2.00	2.55	***B24PPHAP-G200***	***B24SPHAP-G200***
2½"	5.00	4.60	1.19	2.50	4.22	***B24PPHAP-G250***	***B24SPHAP-G250***
3"	5.00	4.60	1.19	3.00	4.22	***B24PPHAP-G300***	***B24SPHAP-G300***
4"	5.65	5.00	1.19	4.00	4.85	***B24PPHAP-G400***	***B24SPHAP-G400***

Block Hanger with Weld Plate Design - *B24**STW*

Polypropylene

Santoprene

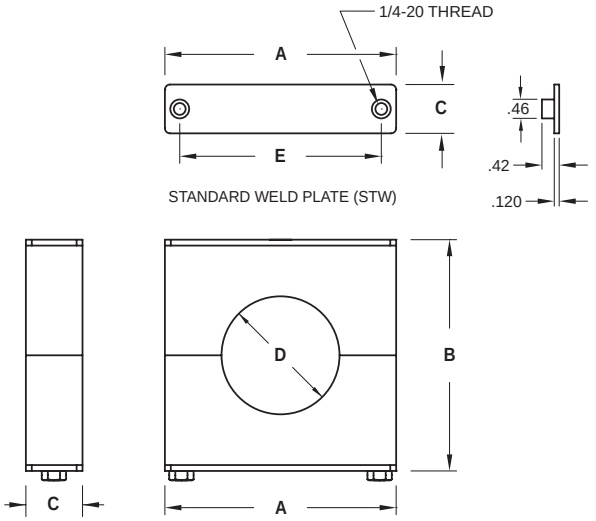

Tube OD	A	B	C	D	E	*Polypropylene* Part Number	*Santoprene* Part Number
½"	1.84	1.70	1.19	0.50	1.33	***B24PPSTW-G50***	***B24SPSTW-G50***
¾"	1.84	1.70	1.19	0.75	1.33	***B24PPSTW-G75***	***B24SPSTW-G75***
1"	3.33	2.85	1.19	1.00	2.55	***B24PPSTW-G100***	***B24SPSTW-G100***
1½"	3.33	2.85	1.19	1.50	2.55	***B24PPSTW-G150***	***B24SPSTW-G150***
2"	3.33	2.85	1.19	2.00	2.55	***B24PPSTW-G200***	***B24SPSTW-G200***
2½"	5.00	4.60	1.19	2.50	4.22	***B24PPSTW-G250***	***B24SPSTW-G250***
3"	5.00	4.60	1.19	3.00	4.22	***B24PPSTW-G300***	***B24SPSTW-G300***
4"	5.65	5.00	1.19	4.00	4.85	***B24PPSTW-G400***	***B24SPSTW-G400***

Bradford™ Custom Fabrication

Machined, Welded and Polished Components

Bradford™ Sight Glasses

Product Specifications

Size Range:
- size range: 1" - 6" OD tube

Material:
- 316L stainless steel
- Borosilicate glass
- white buna gaskets

Finish:
- 32R_a sanitary finish, ID and OD

In-Line Sight Glass - *B54BMP*

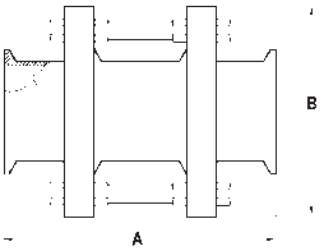

Features:
- various end configurations are available: clamp, weld, bevel seat, John Perry, I-Line and Q-Line
- maximum temperature: **200°F**

Tube OD	A	B	Working Pressure	*316L Stainless Steel* Part Number
1"	5.625	3.250	145	***B54BMP-R100***
1½"	5.625	4.000	145	***B54BMP-R150***
2"	5.625	4.250	145	***B54BMP-R200***
2½"	6.125	4.750	120	***B54BMP-R250***
3"	7.250	5.500	120	***B54BMP-R300***
4"	7.375	6.500	95	***B54BMP-R400***
6"	7.625	9.500	80	***B54BMP-R600***

Kits and Replacement Parts

Size	*Seal Kit* Part Number	*Replacement Glass* Part Number
1"	***B54BMP-SK100***	***B54G-P100***
1½"	***B54BMP-SK150***	***B54G-P150***
2"	***B54BMP-SK200***	***B54G-P200***
2½"	***B54BMP-SK250***	***B54G-P250***

Size	*Seal Kit* Part Number	*Replacement Glass* Part Number
3"	***B54BMP-SK300***	***B54G-P300***
4"	***B54BMP-SK400***	***B54G-P400***
6"	***B54BMP-SK600***	***B54G-P600***

Seal Kit Contains: (2) white Buna gaskets

Acrylic Sight Glass End Caps - *B5416MP*

Features:
- for use on any line with a clamp and gasket
- maximum temperature: **150°F**
- maximum operating pressure: **100 PSI**

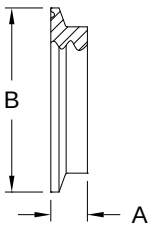

Tube OD	A	B	*acrylic plastic* Part Number
1" - 1½"	.438	1.984	***B5416MP-A100150***
2"	.438	2.516	***B5416MP-A200***
2½"	.438	3.047	***B5416MP-A250***
3"	.438	3.579	***B5416MP-A300***
4"	.438	4.682	***B5416MP-A400***
6"	.438	6.562	***B5416MP-A600***

Bradford™ Filter/Strainer

3A 10-04
1446

Product Specifications

Size range:
- 1" - 3" clamp

Type:
- Inline
  - short
  - long
- Side Entry
  - long

Material:
- 316L stainless steel

Finish:
- 3A sanitary, ID and OD

What Are Filter / Strainers Used For?

Filter Definition
A filter uses a disposable media to remove finer particulate from the stream. Dixon Sanitary holds Authorization Number 1446 for the 3-A Sanitary Standard for Filters using Single Service Filter Media, Number: 10-4. Vertical mounting is necessary to meet 3A 10-04 requirements for minimal product clingage.

Strainer Definition
A strainer is a device used to separate solids from fluids. Here it is used for larger particulate matter from liquid or gas. It uses cleanable media.

Full Flow Filters -
Can be equipped with a variety of filtering media, down to 40 microns, media includes polyester, cotton cheesecloth and nylon mesh.
See chart on page 116.

Full Flow Coarse Strainers -
1/4" or 1/8" perforations.
(1/8" not 3A)

Full Flow Fine/Medium Strainers -
Can be equipped with a variety of mesh screens for removing finer particles (20 to 100 mesh). See chart on page 116.
(not 3A)

Index

In-Line Filter/Strainer 112-113
Side Entry Filter Strainer 114-115
Replacement Filters..... 116
Mesh Over Screens..... 116
Dual Filter/Strainer Options 117

Filters / Strainers

In-line Filter / Strainer - *BSCCQ*

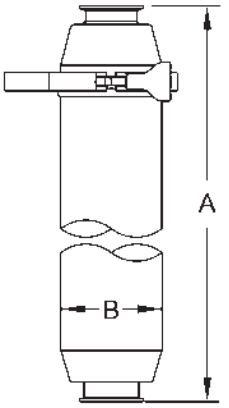

- In-line units ship standard with the following: spring, distributor cap, clamp gasket, 1/4" perforated back-up tube, inlet and outlet bodies and squeeze clamp
- 1/8" perforated back-up tube available, must specify when ordering (not 3A authorized)
- must be vertical mount for 3A usage

Feature:
- Bevel seat, I-line and weld ends available, call Dixon Sanitary for information

Size	A short	A long	B	*Short* *316L Stainless Steel* Part Number	*Long* *316L Stainless Steel* Part Number
1"	15.75	--	4.00	***BSCCQ1-R100***	*---*
1½"	15.75	35.375	4.00	***BSCCQ1-R150***	***BSCCQ2-R150***
2"	15.75	35.375	4.00	***BSCCQ1-R200***	***BSCCQ2-R200***
2½"	15.75	--	4.50	***BSCCS1-R250***	*---*
3"	15.75	35.375	4.50	***BSCCS1-R300***	***BSCCS2-R300***

Filters / Strainers

Bill of Materials

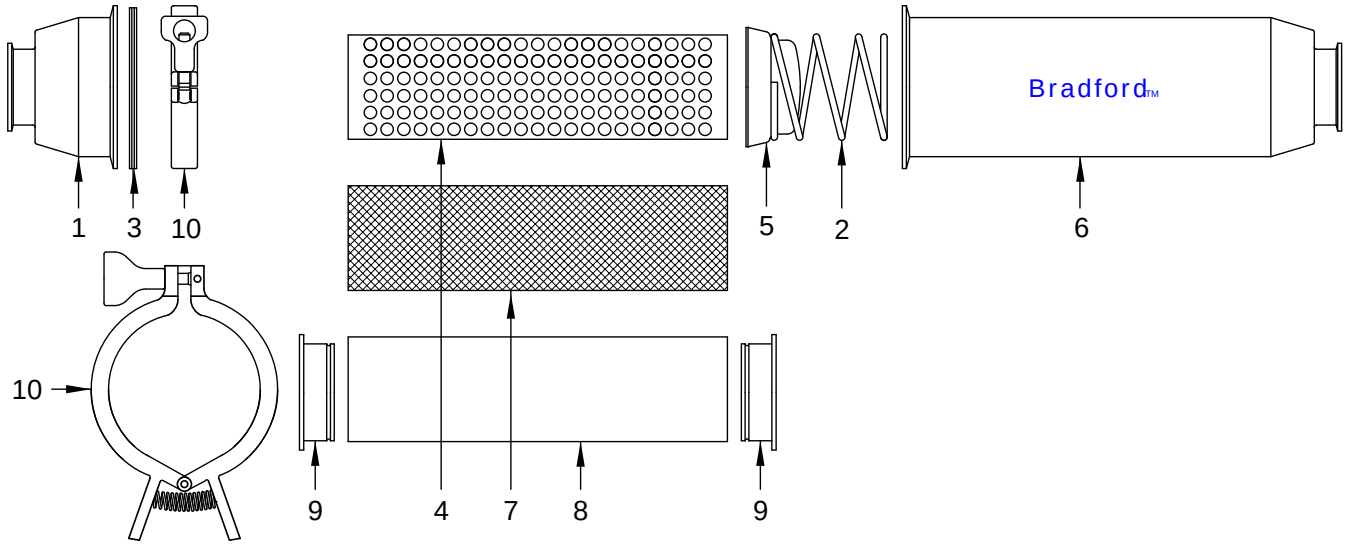

Item #	Description	Short Part #	Long Part #	Material	Qty
1	1" strainer outlet	***BS-01-R100***	*---*	316L stainless steel	1
	1½" strainer outlet	***BS-01-R150***			
	2" strainer outlet	***BS-01-R200***			
	2½" strainer outlet	***BS-01-R250***	*---*		
	3" strainer outlet	***BS-01-R300***			
2	1" - 2" strainer spring	***BS-02-R100-200***		316L stainless steel	1
	2½" - 3" strainer spring	***BS-02-R250-300***			
3	1" - 2" (4") clamp gasket	***40MP-U400***		Buna	1
	2½" - 3" (4") schedule 5 clamp gasket	***40MPV-U400***			
4	1" - 2" back-up tube with 1/8" perforations	***BS-1418-R100200***	***BS-2418-R100200***	316L stainless steel	1
	2½" - 3" back-up tube with 1/8" perforations	***BS-1418-R250300***	***BS-2418-R250300***		
	1" - 2" back-up tube with 1/4" perforations	***BS-1425-R100200***	***BS-2425-R100200***		
	2½" - 3" back-up tube with 1/4" perforations	***BS-1425-R250300***	***BS-2425-R250300***		
5	1" - 2" strainer cap	***BS-05-R100-200***		316L stainless steel	1
	2½" - 3" strainer cap	***BS-05-R250-300***			
6	1" strainer inlet	***BS-16-R100***	*---*	316L stainless steel	1
	1½" strainer inlet	***BS-16-R150***	***BS-26-R150***		
	2" strainer inlet	***BS-16-R200***	***BS-26-R200***		
	2½" strainer inlet	***BS-16-R250***	*---*		
	3" strainer inlet	***BS-16-R300***	***BS-26-R300***		
7	1" - 3" various mesh over screens (short/long)	part number on page 116		316 stainless steel	1
8	1" - 3" various filter bag (short/long)	part number on page 116		various	1
9	1" - 2" retaining ring used with filter bags	***BS-09-U100-200***		Buna	2
	2½" - 3" retaining ring used with filter bags	***BS-09-U250-300***			
10	1" - 2" (4") squeeze clamp	***13MHHM-Q400***		CF8	1
	2½" - 3" (4") schedule 5 squeeze clamp	***13MHHV-Q400***			

Filters / Strainers

Side-Entry Filter / Strainer - *BSCCQ*

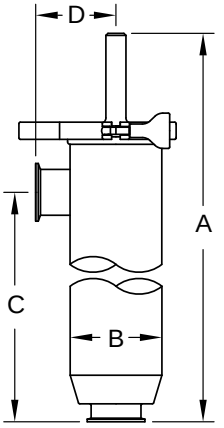

- Side entry units ship standard with the following: spring, end cap with handle, distributor cap, clamp gasket, 1/4" perforated back-up tube, body and squeeze clamp
- 1/8" perforated back-up tube available, must specify when ordering (not 3A authorized)
- must be vertical mount for 3A usage

Features:
- Bevel seat, I-line and weld ends available, call Dixon Sanitary for information
- Serviceable without removing from the line

Size	A	B	C	D	*316L Stainless Steel* Part #
1½"	41.90	4.00	35.00	3.50	***BSCCQ3-R150***
2"	41.90	4.00	35.00	3.50	***BSCCQ3-R200***
3"	41.90	4.50	35.00	3.75	***BSCCQ3-R300***

Filters / Strainers

Bill of Materials

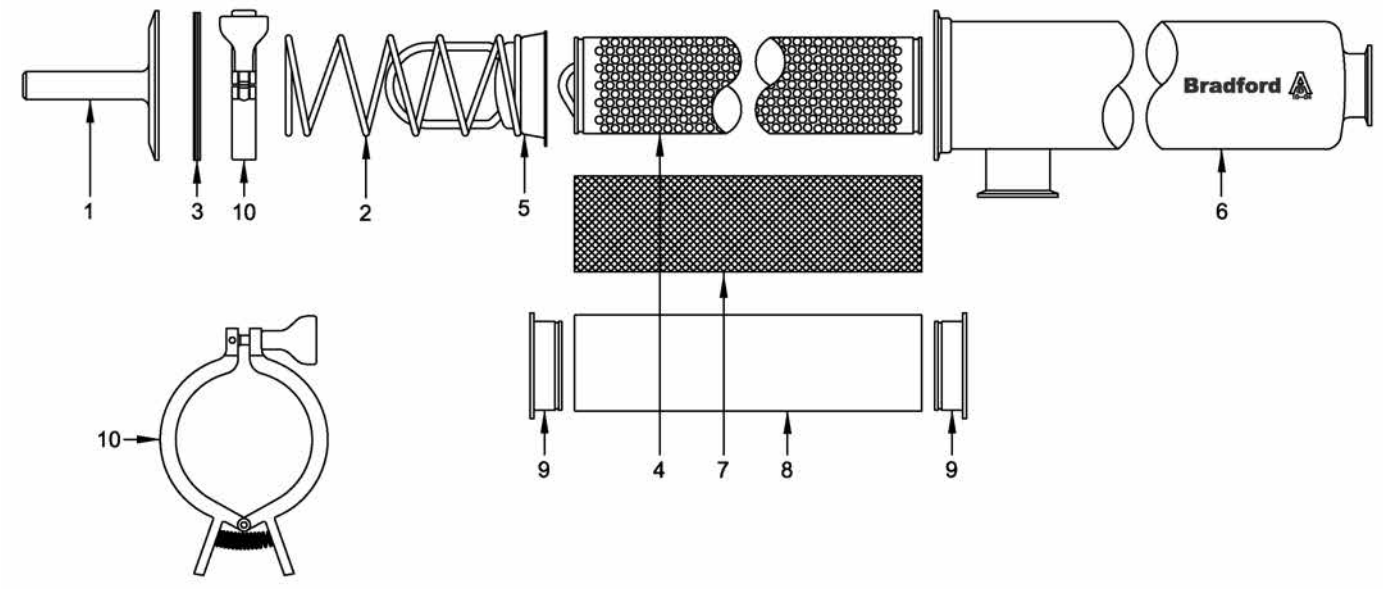

Item #	Description	1½" and 2" Part #	3" Part #	Material	Qty
1	end cap with handle	***BS-31-R100-200***	***BS-31-R250-300***	316L stainless steel	1
2	strainer spring	***BS-32-R100-200***	***BS-32-R250-300***	316L stainless steel	1
3	clamp gasket	***40MP-U400***	***40MPV-U400***	Buna	1
4	back-up tube with 1/8" perforations	***BS-1418-R100200***	***BS-2418-R250300***	316L stainless steel	1
	back-up tube with 1/4" perforations	***BS-1425-R100200***	***BS-2425-R250300***		
5	distributor cap	***BS-35-R100-200***	***BS-35-R250-300***	316L stainless steel	1
6	1½" strainer body	***BS-36-R150***	***---***	316L stainless steel	1
	2" strainer body	***BS-36-R200***	***---***		
	3" strainer body	***---***	***BS-36-R300***		
7	various mesh over screens	part number on page 116		316 stainless steel	1
8	various filter bag	part number on page 116		various	1
9	retaining ring used with filter bags	***BS-09-U100-200***	***BS-09-U250-300***	Buna	2
10	squeeze clamp for assembly	***13MHHM-Q400***	***13MHHV-Q400***	CF8	1

Filters / Strainers

Filters

- Filter medium are special order and minimum quantities apply. Not included with base unit.
- Filters require retaining ring. See pages 113 and 115 for part numbers.

Size	Micron Rating	Description	*Short* Part Number	*Long/Side Entry* Part Number
1" - 2"	38	nonwoven rayon (glued seam)	***BF30A-100-200***	***BF302A-100-200***
2½" - 3"	38	nonwoven rayon (glued seam)	***BF30A-250-300***	***BF302A-250-300***
1" - 2"	513	woven knapped cotton flannel	***BF30B-100-200***	***BF302B-100-200***
2½" - 3"	513	woven knapped cotton flannel	***BF30B-250-300***	***BF302B-250-300***
1" - 2"	300	cheese cloth, single thickness cotton	***BF30C-100-200***	***BF302C-100-200***
2½" - 3"	300	cheese cloth, single thickness cotton	***BF30C-250-300***	***BF302C-250-300***
1" - 2"	765	nylon, 26/29 mesh, rectangular opening, (.025 x .030)	***BF30D-100-200***	***BF302D-100-200***
2½" - 3"	765	nylon, 26/29 mesh, rectangular opening, (.025 x .030)	***BF30D-250-300***	***BF302D-250-300***
1" - 2"	40-42	nonwoven rayon	***BF30E-100-200***	***BF302E-100-200***
2½" - 3"	40-42	nonwoven rayon	***BF30E-250-300***	***BF302E-250-300***
1" - 2"	40	nonwoven rayon	***BF30F-100-200***	***BF302F-100-200***
2½" - 3"	40	nonwoven rayon	***BF30F-250-300***	***BF302F-250-300***
1" - 2"	420	woven nylon, 40 mesh	***BF30G-100-200***	***BF302G-100-200***
2½" - 3"	420	woven nylon, 40 mesh	***BF30G-250-300***	***BF302G-250-300***

316 Stainless Wire Cloth Mesh Over Screens

- Not all sizes are stocked additional sizes may be available (5 piece minimum), call Dixon Sanitary. Not included with base unit.
- not 3A compatible

Size	Micron Rating	Square Mesh	Space Between Wires	Percent of Open Area	*Short* Part Number	*Long/Side Entry* Part Number
1" - 2"	864	20	0.034	46.2	***BS20-100-200***	***BS202-100-200***
2½" - 3"	864	20	0.034	46.2	***BS20-250-300***	***BS202-250-300***
1" - 2"	381	40	0.015	36.0	***BS40-100-200***	***BS402-100-200***
2½" - 3"	381	40	0.015	36.0	***BS40-250-300***	***BS402-250-300***
1" - 2"	229	60	0.009	30.3	***BS60-100-200***	***BS602-100-200***
2½" - 3"	229	60	0.009	30.3	***BS60-250-300***	***BS602-250-300***
1" - 2"	178	80	0.007	31.4	***BS80-100-200***	***BS802-100-200***
2½" - 3"	178	80	0.007	31.4	***BS80-250-300***	***BS802-250-300***
1" - 2"	140	100	0.006	30.3	***BS100-100-200***	***BS1002-100-200***
2½" - 3"	140	100	0.006	30.3	***BS100-250-300***	***BS1002-250-300***

Pressure Drop Curves for Filter and Strainer

Water at ambient temperature

- maximum flow for short units is 125 GPM

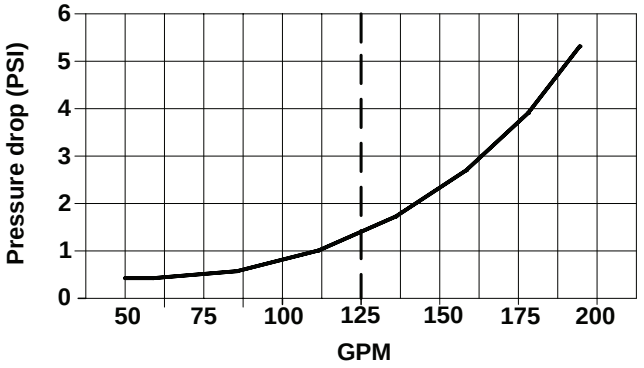

Dual Filters / Strainers

Application:
Use when system needs to be cleaned regularly but product flow needs to be maintained. Short, long and side entry dual units are available with manual or actuated valves, contact Dixon Sanitary for information.

Design Using 3-way Ball Valves

Description	Part #	Qty
3-way L port ball valve, sizes 1" to 3"	***BV3SVLF***	2
heavy duty squeeze clamps, sizes 1" to 3", various styles	***13MHHM-Q***	4
single pin heavy duty clamps, sizes 1" to 3"	***13MHHM***	4
clamp 90° elbow, sizes 1" to 3"	***B2CMP-R***	4
clamp gaskets in various materials, sizes 1" to 3"	***40MP***	8

Design Using Butterfly Valves

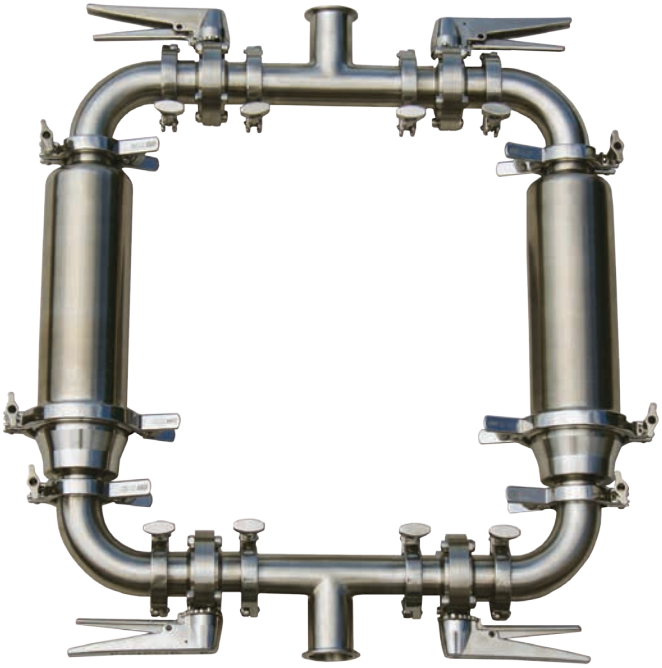

Description	Part #	Qty
butterfly valve, various handles, actuation and seat materials, sizes 1" - 3"	***B5101***	4
clamp, tee, sizes 1" - 3"	***B7MP***	2
clamp, 90° elbow, sizes 1"-3"	***B2CMP***	4
heavy duty squeeze clamps, sizes 1"-3"	***13MHHM-Q***	4
single pin heavy duty clamps, sizes 1" to 3"	***13MHHM***	8
clamp gaskets in various materials, sizes 1"-3"	***40MP***	12

Bradford™ Gauges

Model Number Breakdown

3S-E-2U-GFBTSS

- Series
- Pressure Range
- Fitting size and type
- Filled Case
- Mount type
- Diaphragm Material

Product Specifications

Size range:
- 1½", 2", 2½" or 3"

Material:
- 316L stainless steel

Finishes:
- 3A sanitary
- pharmaceutical

Ordering Information

Series

3S.....3½" Sanitary pressure gauge
5S.....5" Sanitary pressure gauge
3P.....3½" Pharmaceutical pressure gauge
5P.....5" Pharmaceutical pressure gauge

Pressure Range *

B.....0 to 30 PSI (2 BAR)
C.....0 to 60 PSI (4 BAR)
D.....0 to 100 PSI (7 BAR)
E.....0 to 160 PSI (11 BAR)
F.....0 to 200 PSI (14 BAR)
G.....0 to 300 PSI (21 BAR)
H.....0 to 400 PSI (28 BAR)
I.....0 to 600 PSI (41 BAR)
K.....0 to 1,000 PSI (70 BAR)

* Standard scales are in PSI only. For dual scales, add the letter B for PSI/BAR after the pressure range letter.

Fitting Type *

specify size in inches: 15, 2, 25 or 3

I.....male I-Line
J.....female I-Line
R.....RJT
S.....#15 Bevel Seat sanitary male thread
T.....#13H captive nut and #14 Bevel Seat
U.....clamp
DIN.....DIN according to DIN 11851 (*specify DIN40 or DIN50*)
SMS.....SMS (*specify SMS38 or SMS51*)

* specify size then type, i.e. 1½" = 15

Filled Case

GF.....glycerine filled
NF.....no fill (dry)

Mount type

BT.....bottom
RT.....right side
LF.....left side
TP.....top
BK.....back

Diaphragm Material

SS.....stainless steel

Index

Sanitary 119-120
Pharmaceutical..... 121
Homogenizer pressure gauges 122-123
Thermometers 124
Sanitary RTD's and temperature transmitters 125-126
Instrumentation tees 127
Gauges 128-130
Instrumentation fittings 131-133

Sanitary Pressure Gauges

Product Specifications:
- accuracy: ± 1.5% of full scale
- over range capacity: 30%
- wetted surfaces: 316L stainless steel
- surface finishes (wetted parts): R_a max = 25 microinches
- case material: 304 stainless steel
- dial size: 3½" or 5" diameter
- lens material: polycarbonate
- temperature limits: 0°F (-18°C) to 250°F (121°C)
- standard fill: food grade glycerin
- rezero feature: standard on pointer
- shipping weight: approximately 3 lbs. (1.3 kg)

3S-EB-2U-GFBTSS

3½" Gauge - *(90 mm)*

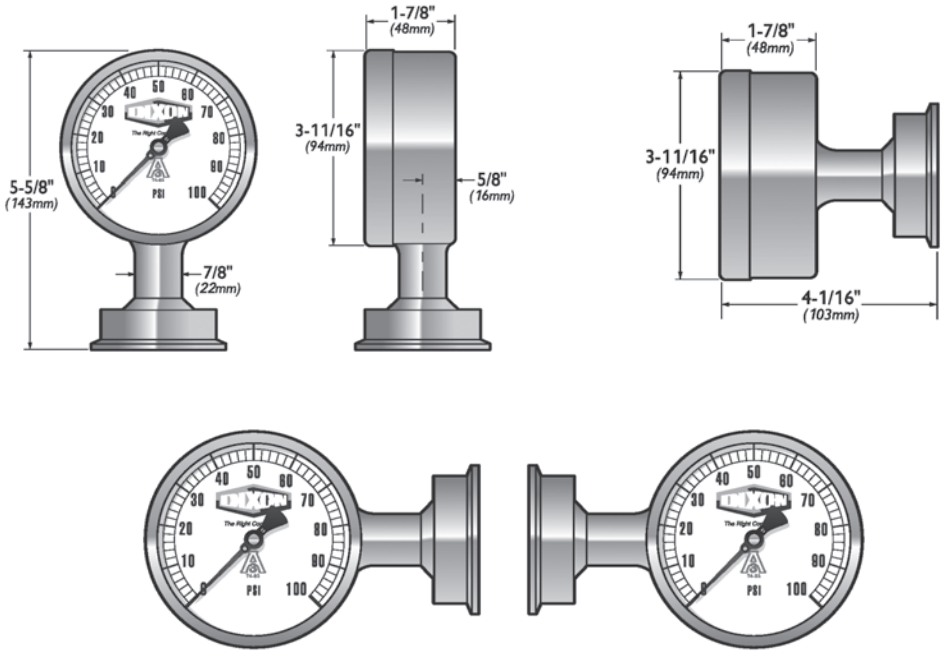

5" Gauge - *(120 mm)*

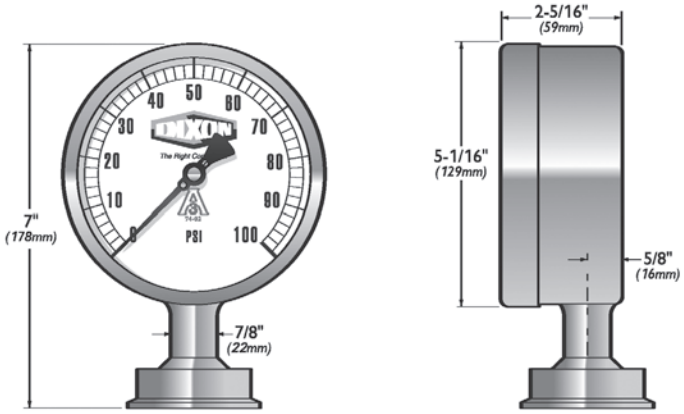

shown with 2" clamp

Sanitary Pressure Gauges

Part #	Dial Size	Pressure Range (PSI)	Clamp Size	Mount
3S-B-15U-GFBTSS	3.5"	0-30	1½"	bottom
3S-C-15U-GFBTSS	3.5"	0-60	1½"	bottom
3S-D-15U-GFBTSS	3.5"	0-100	1½"	bottom
3S-E-15U-GFBTSS	3.5"	0-160	1½"	bottom
3S-F-15U-GFBTSS	3.5"	0-200	1½"	bottom
3S-G-15U-GFBTSS	3.5"	0-300	1½"	bottom
3S-B-15U-GFBKSS	3.5"	0-30	1½"	back
3S-C-15U-GFBKSS	3.5"	0-60	1½"	back
3S-D-15U-GFBKSS	3.5"	0-100	1½"	back
3S-E-15U-GFBKSS	3.5"	0-160	1½"	back
3S-F-15U-GFBKSS	3.5"	0-200	1½"	back
3S-G-15U-GFBKSS	3.5"	0-300	1½"	back
3S-B-2U-GFBTSS	3.5"	0-30	2"	bottom
3S-C-2U-GFBTSS	3.5"	0-60	2"	bottom
3S-D-2U-GFBTSS	3.5"	0-100	2"	bottom
3S-E-2U-GFBTSS	3.5"	0-160	2"	bottom
3S-F-2U-GFBTSS	3.5"	0-200	2"	bottom
3S-G-2U-GFBTSS	3.5"	0-300	2"	bottom
3S-B-2U-GFBKSS	3.5"	0-30	2"	back
3S-C-2U-GFBKSS	3.5"	0-60	2"	back
3S-D-2U-GFBKSS	3.5"	0-100	2"	back
3S-E-2U-GFBKSS	3.5"	0-160	2"	back
3S-F-2U-GFBKSS	3.5"	0-200	2"	back
3S-G-2U-GFBKSS	3.5"	0-300	2"	back

Pharmaceutical Pressure Gauges

Product Specifications:

- accuracy: ± 0.75% of full scale
- over range capacity: 30%
- wetted surfaces: 316L stainless steel
- surface finishes (wetted parts): R_a max = 8 microinches
- case material: 304 stainless steel
- dial size: 3½" or 5" diameter
- lens material: polycarbonate
- temperature limits: 0°F (-18°C) to 250°F (121°C)
- standard fill: food grade glycerin
- rezero feature: standard on pointer
- shipping weight: approximately 3 lbs. (1.3 kg)
- dial size: 3½" diameter

3P-D-15U-GFBT

3½" Gauge - *(90 mm)*

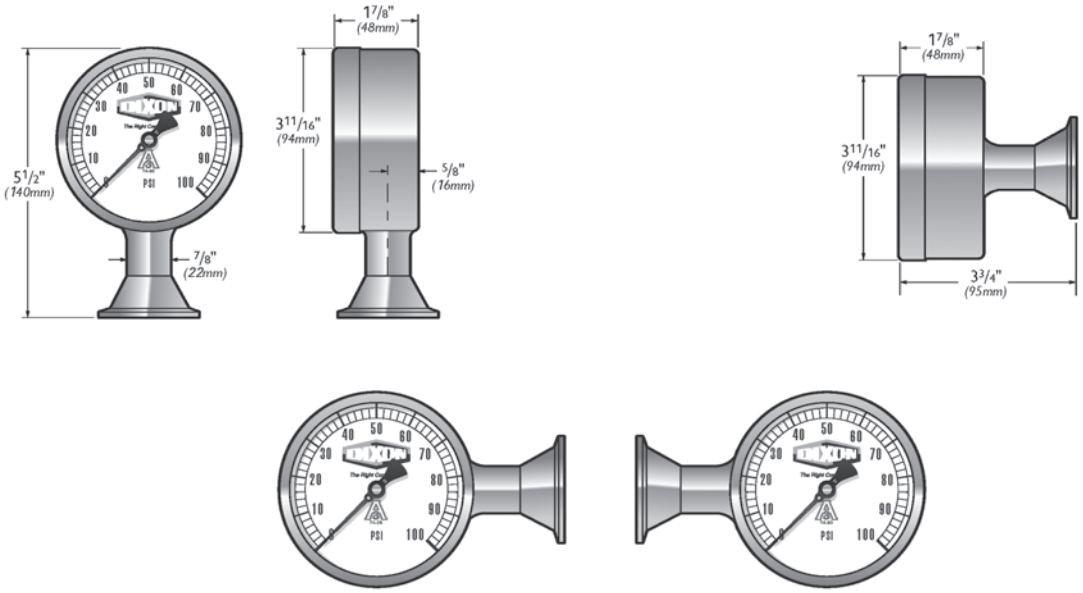

5" Gauge - *(120 mm)*

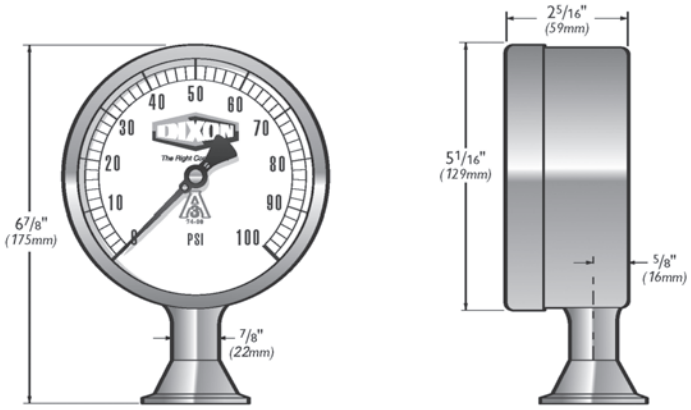

Homogenizer Pressure Gauges

Model Number Breakdown

5H - V - 03

Series

Pressure Range

Flange

Ordering Information

Series

5H.....5" Sani-Flow Homogenizer Pressure Gauge

Pressure Range *

K.....0 to 1,000 PSI (70 BAR)
T.....0 to 2,500 PSI (170 BAR)
U.....0 to 3,000 PSI (205 BAR)
V.....0 to 5,000 PSI (350 BAR)
Y.....0 to 7,500 PSI (520 BAR)
W.....0 to 10,000 PSI (700 BAR)
X.....0 to 15,000 PSI (1000 BAR)

* Standard scales are in PSI only. For dual scales, after the pressure range add the letter B for PSI/BAR, K for PSI/Kg/cm3, P for PSI/KPa (see examples below).

Examples

5H-V-03 - describes a 5" sani-flow homogenizer pressure gauge, 0 to 5,000 PSI, a 1-1/8" thick flange, and a glycerine filled case

5H-WB-01 - describes a 5" sani-flow homogenizer pressure gauge, dual scale 0 to 10,000 PSI/0 to 700 BAR, no flange, and a glycerine filled case

Flange

01 .....no flange
02 .....7/8" thick 2 bolt flange
03 .....1-1/8" thick 2 bolt flange
04 .....Waukesha 1/2" thick 4 bolt flange
05 .....Waukesha 3/4" thick 4 bolt flange
09 .....1.66" thick laboratory homogenizer flange

Homogenizer Pressure Gauges

Product Specifications:

- 316L stainless steel wetted surfaces
- 304 stainless steel case
- Lexan® lens virtually impervious to cracks and breakage
- Unique pulsation dampening system insulates the gauge movement from the punishing pulsations of a homogenizer
- ranges up to 15,000 PSI.
- dial size: 5"
- glycerine fill standard
- waterproof construction
- CIP-able
- maximum temperature: 250°F
- true zero with re-zero standard

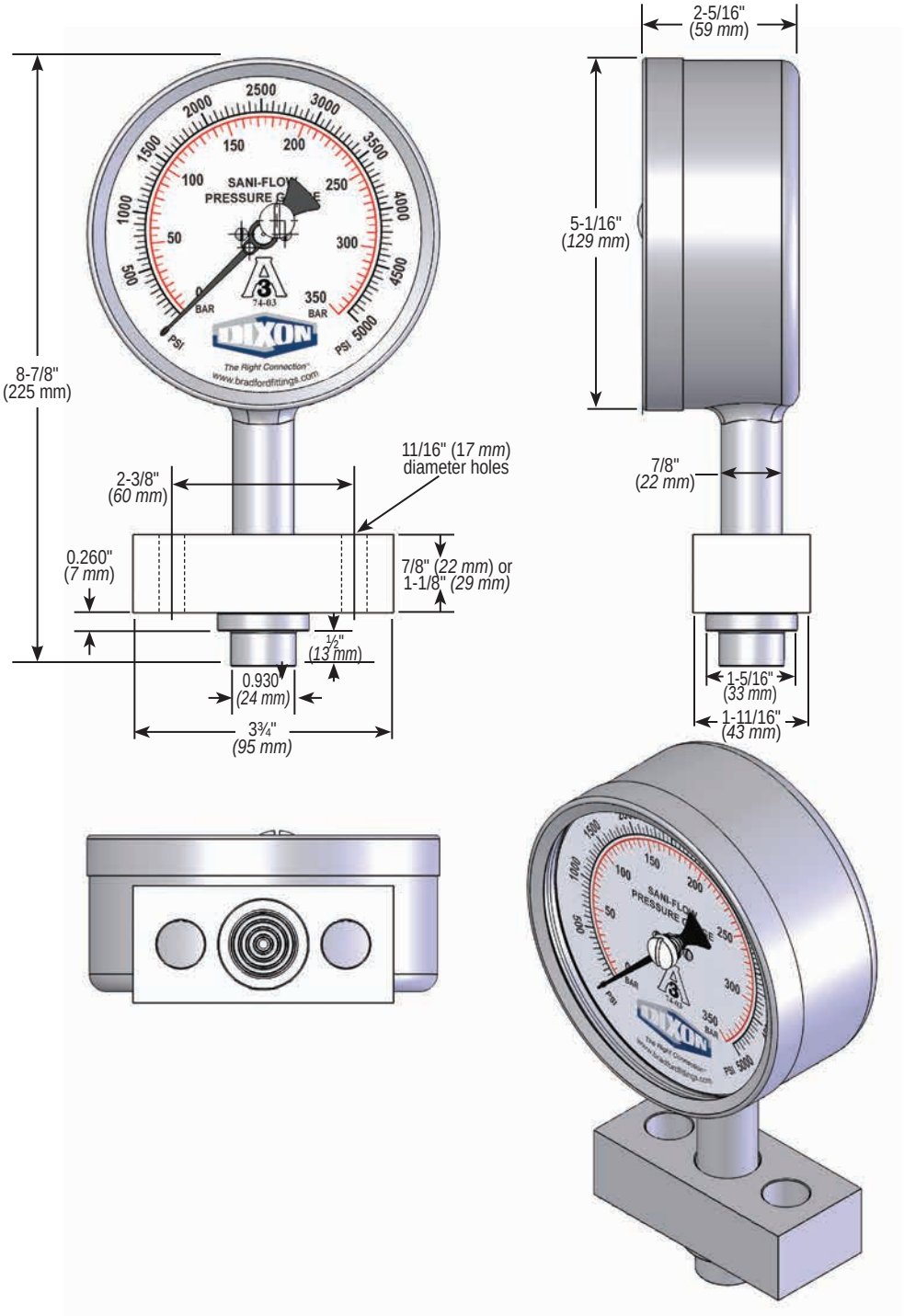

Sanitary Digital Thermometers

Model Number Breakdown

DT-2U-BT-DF-10

- Series
- Fitting Size and Type
- Mount Type
- Display
- Up-Date Interval

Product Specifications:

- accuracy: ±1°
- wetted surfaces: 316L stainless steel
- surface finish: R_a max.is 8 microinches
- case material: 304 stainless steel
- dial size: 3½" diameter
- lens material: ¼" polycarbonate
- temperature limits: -58°F to 302°F
- ambient operating limits: -4°F to 140°F
- LCD display: 0.6"
- resolution: 0.1° (-58° thru 199.9°)
- battery size / life: standard AAA/3 years
- shipping weight: approximately 3 lbs.

Ordering Information

Series

DT.....Sanitary digital thermometer

Fitting Type *

sizes available: 75, 15, 2, 25, 3 and 4

I.....male I-Line
T .....#13H captive nut and #14 Bevel Seat
U.....Clamp

* specify size then type, i.e. 1½"=15U.

Mount type

BT.....bottom
RT.....right side
LF.....left side
TP.....top
BK.....back
BTR.....remote fitting

Display

DF.....F (Fahrenheit) *standard*
DC.....C (Celsius)

Up-Date Interval

1.....one second (*1 year battery life*)
10 .....ten second (*3 year battery life*)

Dimensions

Ordering code shown with clamp configuration "U". See ordering info for other types available.

Size	Probe Length *	Code
¾"	2-3/8"	75U
1"	2-5/8"	1U
1½"	2-3/4"	15U
2"	3-1/2"	2U
2½"	3-1/2"	25U
3"	3-3/4"	3U
4"	4-1/2"	4U

* custom probe lengths are available

LEFT SIDE MOUNT

RIGHT SIDE MOUNT

BACK MOUNT

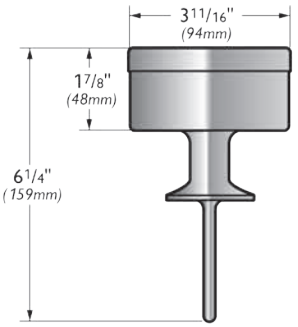

BOTTOM MOUNT

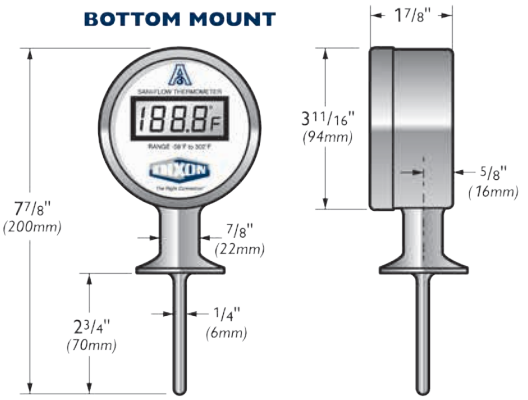

Sanitary RTD's and Temperature Transmitters

Model Number Breakdown

RTD - 15U - E1

Series — Fitting — Element

Ordering Information

Series

RTD.....Sani-Flow resistive temperature device
TT.....Sani-Flow temperature transmitter

Sanitary Fittings

fittings available in 5, 75, 15, 20, 25, 30 and 40

H.....G & H 'H' line male
I.....Cherry-Burrell male I-line
K.....APC 'K' clamp
Q.....Cherry-Burrell Q-line
T.....#13H captive nut and #14 bevel seat
U.....Tri-clamp®

- Specify size, then adapter type such as 15U for 1½" Tri-clamp® adapter
- For special probes add SP and the required probe length at the end of the part number; such as SP2.75 for a 2¾" long probe.

Other Fittings

Specify probe length

A.....air space
M.....umbrella fittings
NPT.....1/4", 3/8", 1/2", 5/8" or 3/4" pipe thread
PW.....projectile well with 1¼"-18 UNEF male thread
SP.....split ferrule
VP.....VAT well fitting with #13H captive nut
OF.....no fitting

Element *

E1.....single element
E2.....dual element

* available for RTD only

Sanitary RTD's & Temperature Transmitters

sanitary RTD

temperature transmitter

Product Specifications:

- 316L wetted surfaces
- exterior surfaces 316L with a near mirror finish
- standard 12mm industrial connector with gold plated contacts for maximum corrosion resistance and cleanability
- sensor elements are accurate up to +/-0.1C.
- RTD – temperature range: -58°F to 392°F
- TT – temperature range: -22°F to 302°F

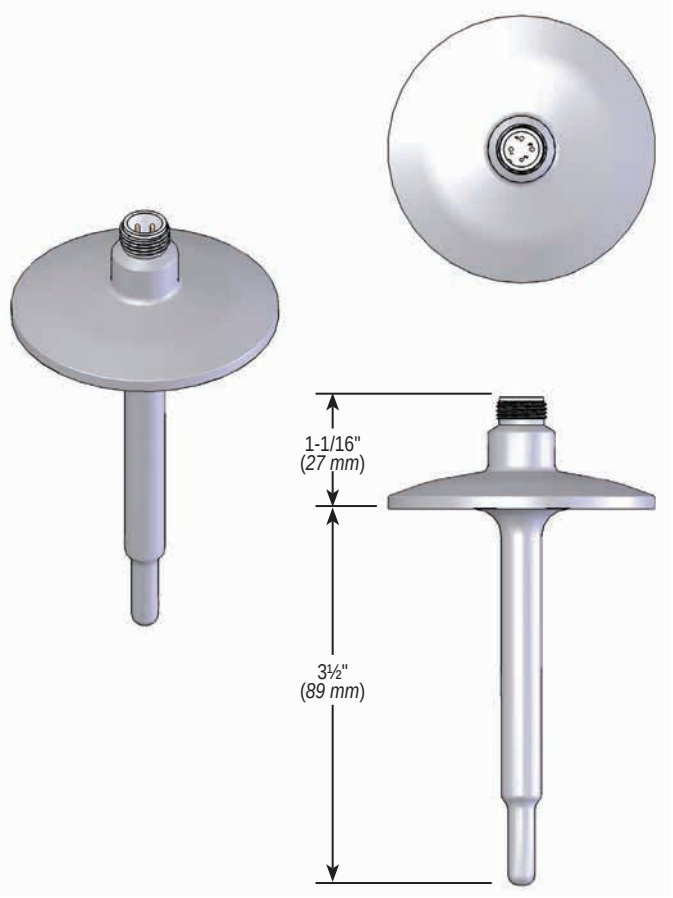

RTD-20GI-38

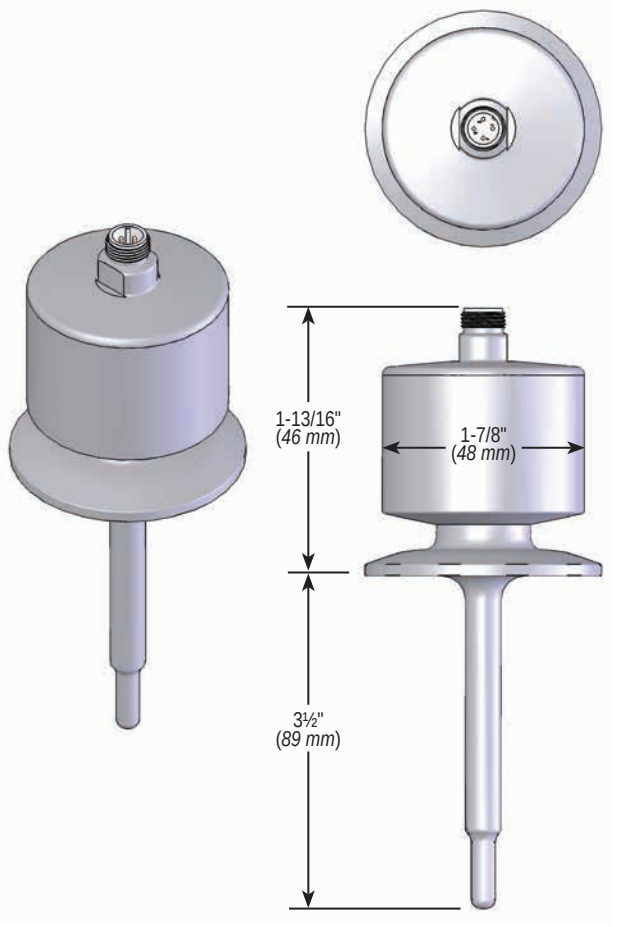

TT-20-G1

Note: custom lengths are available

Instrument Tees

Weld x Weld x Clamp Instrument Tees - TIWWMS

Size	A	B	*316L Stainless Steel* **PL Finish - SF1**	*316L Stainless Steel* **PM Finish - SF4**
½" x 1½"	5.000	.875	***T7IWWMS-050150PL***	***T7IWWMS-050150PM***
¾" x 1½"	5.000	1.000	***T7IWWMS-075150PL***	***T7IWWMS-075150PM***
1" x 1½"	5.000	1.125	***T7IWWMS-100150PL***	***T7IWWMS-100150PM***
½" x 2"	5.500	1.000	***T7IWWMS-050200PL***	***T7IWWMS-050200PM***
¾" x 2"	5.500	1.125	***T7IWWMS-075200PL***	***T7IWWMS-075200PM***
1" x 2"	5.500	1.250	***T7IWWMS-100200PL***	***T7IWWMS-100200PM***
1½" x 2"	5.500	1.500	***T7IWWMS-150200PL***	***T7IWWMS-150200PM***

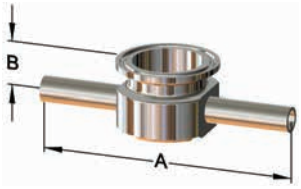

BPE Table DT-4.1.2-10

Clamp x Clamp x Clamp Instrument Tees - T7IMPS

Size	A	B	*316L Stainless Steel* **PL Finish - SF1**	*316L Stainless Steel* **PM Finish - SF4**
½" x 1½"	6.000	.875	***T7IMPS-050150PL***	***T7IMPS-050150PM***
¾" x 1½"	6.000	1.000	***T7IMPS-075150PL***	***T7IMPS-075150PM***
1" x 1½"	6.000	1.125	***T7IMPS-100150PL***	***T7IMPS-100150PM***
½" x 2"	6.500	1.000	***T7IMPS-050200PL***	***T7IMPS-050200PM***
¾" x 2"	6.500	1.125	***T7IMPS-075200PL***	***T7IMPS-075200PM***
1" x 2"	6.500	1.250	***T7IMPS-100200PL***	***T7IMPS-100200PM***
1½" x 2"	6.500	1.500	***T7IMPS-150200PL***	***T7IMPS-150200PM***

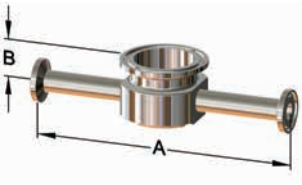

BPE Table DT-4.1.2-10

Note: Not all sizes and finishes are stocked

PL Finish – SF1
OD = 32R_a Mechanically Polished
ID = 20R_a Mechanically Polished

PM Finish – SF4
OD = 32R_a Mechanically Polished
ID = 15R_a Mechanically Polished and Electropolished

ABS Standard Dry Gauges

Features:

- ABS plastic case
- polycarbonate crystal
- PowerFlex™ movement with polyester segment, designed to resist the effects of shock, vibration and pulsation.
- ambient temperature range of **-40°F** to **150°F**

Center Back Mount

GC230

1½" face
1/8" center back mount

PSI	Figure Interval	Minor Gradient	Part Number
0-30	5	.5	***GC605***
0-60	5	1	***GC610***
0-100	10	2	***GC615***
0-160	20	5	***GC620***
0-200	20	5	***GC625***

2" face
1/4" center back mount

PSI	Figure Interval	Minor Gradient	Part Number
0-15	1	.5	***GC200***
0-30	5	.5	***GC215***
0-60	5	1	***GC220***
0-100	10	2	***GC225***
0-160	20	5	***GC230***
0-200	20	5	***GC235***
0-300	30	5	***GC240***

Lower Mount

GL140

2" face
1/4" lower mount

PSI	Figure Interval	Minor Gradient	Part Number
0-15	1	.5	***GL100***
0-30	5	.5	***GL115***
0-60	5	1	***GL120***
0-100	10	2	***GL125***
0-160	20	5	***GL130***
0-200	20	5	***GL135***
0-300	30	5	***GL140***

Liquid Filled Stainless Case Gauges

Features:
- copper alloy bourdon tube
- PowerFlex™ movement with polyester segment, designed to resist the effects of shock, vibration and pulsation.
- glycerin liquid fill
- polycarbonate window
- ambient temperature range of **-4°F** to **140°F**

2½" face
¼" lower mount

PSI	Figure Interval	Minor Gradient	Part Number
0-15	1	.5	***GLS400***
0-30	5	.5	***GLS405***
0-60	5	1	***GLS410***
0-100	10	2	***GLS415***
0-160	20	5	***GLS417***
0-200	20	5	***GLS420***
0-300	30	5	***GLS425***
0-400	50	10	***GLS427***
0-600	50	10	***GLS430***
0-1000	200	20	***GLS435***
0-1500	300	50	***GLS440***
0-2000	400	50	***GLS445***
0-3000	500	100	***GLS450***
0-5000	1000	100	***GLS455***

GLS430

Liquid Filled ABS Case Gauges

2½" face
¼" lower mount

PSI	Figure Interval	Minor Gradient	Part Number
0-15	1	.5	***GLP500***
0-30	5	.5	***GLP505***
0-60	5	1	***GLP510***
0-100	10	2	***GLP515***
0-160	20	5	***GLP517***
0-200	20	5	***GLP520***
0-300	30	5	***GLP525***
0-400	50	10	***GLP527***
0-600	50	10	***GLP530***
0-1000	200	20	***GLP535***
0-1500	300	50	***GLP540***
0-2000	400	50	***GLP545***
0-3000	500	100	***GLP550***
0-5000	1000	100	***GLP555***

GLP550

Compound Gauges

Features:

- ABS plastic case
- bronze bourdon tube / brass socket
- polycarbonate crystal
- brass movement with polyester segment, designed for extended wear
- ambient temperature range of **-40°F** to **150°F**

GL310

2½" face
¼" center back mount

Mercury (Hg)	PSI	Figure Interval Hg / PSI	Minor Gradient Hg / PSI	Part Number
30"	0-160	30 / 20	5 / 5	***GC210***

2½" face
¼" lower mount

Mercury (Hg)	PSI	Figure Interval Hg / PSI	Minor Gradient Hg / PSI	Part Number
30"	0-100	30 / 10	5 / 2	***GL310***
30"	0-160	30 / 20	10 / 10	***GL110***
30"	0-200	30 / 20	10 / 10	***GL315***

Vacuum Gauges

Features:

- ABS plastic case
- bronze bourdon tube
- polycarbonate crystal
- ambient temperature range of **-40°F** to **150°F**

GL105

2" face
¼" lower mount

Mercury (Hg)	Figure Interval	Minor Gradient	Part Number
30"	5"	.5"	***GL105***

2" face
¼" center back mount

Mercury (Hg)	Figure Interval	Minor Gradient	Part Number
30"	5"	.5"	***GC205***

2½" face
¼" lower mount

Mercury (Hg)	Figure Interval	Minor Gradient	Part Number
30"	5"	.5"	***GL305***

Instrumentation Fittings

Applications:
- high pressure
- high temperature
- nitrogen
- helium
- flammable gases
- hydraulic gases
- corrosive media

Instrumentation fittings come completely assembled.

Installation Instructions:
1. Cut tubing squarely and clean tube end thoroughly to remove burrs.
2. Insert the tubing into the assembly making sure the tubing seats firm against the shoulder of the body and the nut is finger tight.
3. Tighten the nut with a wrench 1¼ turns, while holding the body with a second wrench.

Suggested Working Pressures

Wall Thk.	.028	.035	.049	.065	.083	.095	.109
1/4"	4,000	5,100	7,500	10,100	---	---	---
3/8"	---	3,300	4,700	6,600	---	---	---
1/2"	---	2,600	3,700	5,000	6,600	---	---
5/8"	---	---	2,900	3,900	5,200	6,000	---
3/4"	---	---	2,400	3,200	4,200	4,900	5,700

Features:
- fully interchangeable with Swagelok® and Parker A-Lok® fittings
- double collet (ferrule) swaging action
- two positive seal points
- ASTM material construction
- material: 316 stainless steel
- temperature ratings: **-325°F** to **1200°F** (-198°C to 648°C)
- pressure ratings: see chart to the left
  Ratings listed are for reference only.

Safety Guidelines:
- Never connect, disconnect or remake a fitting with pressure in the system.
- Make sure all fittings are properly installed.
- It is not recommended to go beyond the pressure rating of the tubing. Elongation could occur in the tubing, shrinking the wall thickness and cause potential harm.
- For proper sealing it is recommended that the tubing and fittings be of like material.
- Always use proper thread lubricant and sealants on tapered pipe threads.
- Never bleed a system by loosening a fitting.

Male Connectors

Tube OD	Male NPT	Interchanges	*316 Stainless Steel* Part Number
1/4"	1/8"-27	400-1-2	***4-DMC-2***
	1/4"-18	400-1-4	***4-DMC-4***
	3/8"-18	400-1-6	***4-DMC-6***
	1/2"-14	400-1-8	***4-DMC-8***
3/8"	1/4"-18	600-1-4	***6-DMC-4***
	3/8"-18	600-1-6	***6-DMC-6***
	1/2"-14	600-1-8	***6-DMC-8***
1/2"	1/4"-18	810-1-4	***8-DMC-4***
	3/8"-18	810-1-6	***8-DMC-6***
	1/2"-14	810-1-8	***8-DMC-8***
5/8"	1/2"-14	1010-1-8	***10-DMC-8***
3/4"	1/2"-14	1210-1-8	***12-DMC-8***
	3/4"	1210-1-12	***12-DMC-12***

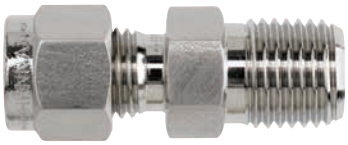

Female Connectors

Tube OD	Female NPT	Interchanges	*316 Stainless Steel* Part Number
1/4"	1/8"-27	400-7-2	***4-DFC-2***
1/4"	1/4"-18	400-7-4	***4-DFC-4***
3/8"	1/4"-18	600-7-4	***6-DFC-4***
3/8"	1/2"-14	600-7-8	***6-DFC-8***
1/2	1/2"-14	810-7-8	***8-DFC-8***

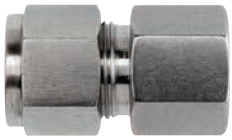

Male Elbows

Tube OD	Male NPT	Interchanges	*316 Stainless Steel* Part Number
1/4"	1/8"-27	400-2-2	***4-DME-2***
	1/4"-18	400-2-4	***4-DME-4***
3/8"	1/4"-18	600-2-4	***6-DME-4***
	3/8"-18	600-2-6	***6-DME-6***
1/2"	1/2"-14	810-2-8	***8-DME-8***
3/4"	1/2"-14	1210-2-8	***12-DME-8***
	3/4"	1210-2-12	***12-DME-12***

Instrumentation Fittings

Union Tees

Tube OD	Interchanges	*316 Stainless Steel* Part Number
1/4"	400-3	***4-DTTT-4***
3/8"	600-3	***6-DTTT-6***
1/2"	810-3	***8-DTTT-8***

Unions

Tube OD	Interchanges	*316 Stainless Steel* Part Number
1/4" x 1/4"	400-6	***4-DU***
3/8" x 1/4"	600-6-4	***6-DU-4***
3/8" x 3/8"	600-6	***6-DU***
1/2" x 1/2"	810-6	***8-DU***

Bulkhead Unions

Tube OD	Interchanges	*316 Stainless Steel* Part Number
1/4"	400-61	***4-DBHU-4***
3/8"	600-61	***6-DBHU-6***
1/2"	810-61	***8-DBHU-8***

Front Ferrules

Tube OD	Interchanges	*316 Stainless Steel* Part Number
1/4"	403-1	***DFC-4***
3/8"	603-1	***DFC-6***
1/2"	813-1	***DFC-8***

Rear Ferrules

Tube OD	Interchanges	*316 Stainless Steel* Part Number
1/4"	404-1	***DRC-4***
3/8"	604-1	***DRC-6***
1/2"	814-1	***DRC-8***

Nuts

Tube OD	Interchanges	*316 Stainless Steel* Part Number
1/4"	402-1	***DN-4***
3/8"	602-1	***DN-6***
1/2"	812-1	***DN-8***

Instrumentation Fittings

Union Elbows

Tube OD	Interchanges	*316 Stainless Steel* Part Number
1/4"	400-9	***4-DELU-4***
3/8"	600-9	***6-DELU-6***
1/2"	810-9	***8-DELU-8***

Reducers

Tube OD	Interchanges	*316 Stainless Steel* Part Number
1/4" x 1/8"	400-R-2	***4-DRATT-2***
3/3/8" x 1/4"	600-R-4	***6-DRATT-4***
3/8" x 1/2"	600-R-8	***6-DRATT-8***
1/2" x 3/4"	810-R-12	***8-DRATT-12***
3/4" x 1/2"	1210-R-8	***12-DRATT-8***

Female Elbows

Tube OD	Female NPT	Interchanges	*316 Stainless Steel* Part Number
1/4"	1/4"-18	400-8-2	***4-DFE-2***
3/8"	1/4"-18	600-8-4	***6-DFE-4***
1/2"	1/2"-14	810-8-8	***8-DFE-8***

Male Branch Tee

Tube OD	Male NPT	Interchanges	*316 Stainless Steel* Part Number
1/4"	1/4"-18	400-3-4TTM	***4-DTTM-4***

Male Run Tees

Tube OD	Male NPT	Interchanges	*316 Stainless Steel* Part Number
1/4"	1/4"-18	400-3-4TMT	***4-DTMT-4***
3/8"	1/4"-18	600-3TMT	***6-DTMT-4***

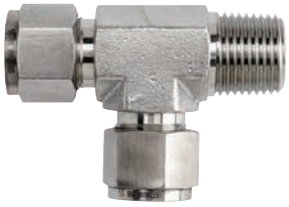

Caps

Tube OD	Interchanges	*316 Stainless Steel* Part Number
1/4"	400-C	***4-DCAP***
3/8"	600-C	***6-DCAP***
1/2"	810-C	***8-DCAP***

Plugs

Tube OD	Interchanges	*316 Stainless Steel* Part Number
1/4"	400-P	***4-DFPLUG***
3/8"	600-P	***6-DFPLUG***
1/2"	810-P	***8-DFPLUG***

Bradford™ Spray Balls

Product Specifications

Size range:
- ¾" and 1½" NPT
- 1" and 1½" OD tube
- 1½" clamp

Material:
- 304 stainless steel
- 316L stainless steel

Finishes:
- mirror-like finish OD

Index

Rotating 134
Stationary 135
Washdown accessories 136
Washdown stations 137
Jax products 138
Thread sealant paste 139
PTFE tape 139

Rotating Spray Balls - *SRH*

Features:
- stainless steel ball bearings to eliminate rust
- ideal for cleaning all types of tanks and vessels
- cleaning solution used to lubricate unit
- connections available: clamp and NPT
- mirror-like finish OD
- spray pattern: 360°

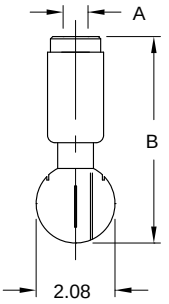

Size	Type	A	B	*304 Stainless Steel* Part Number	*316L Stainless Steel* Part Number
¾"	NPT	¾" NPT	5.46	***SRH360NPT-G075***	*---*
1½"	NPT	1½" NPT	5.46	*---*	***SRH360NPT-R150***
1½"	Clamp	1.984	5.46	***SRH360CMP-G150***	***SRH360CMP-R150***

Dimensions are approximate. Engineering dimensions are available upon request.
Specifications are subject to change without notice.

Technical Data

Cleaning Radius

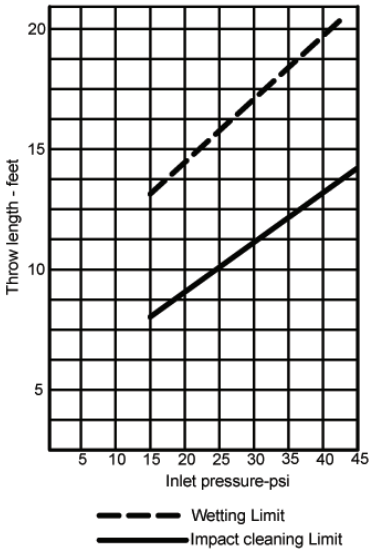

Flow Rate

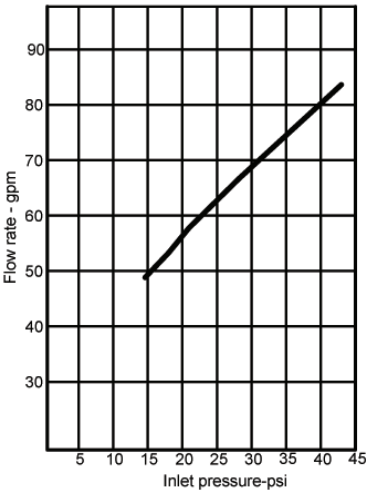

Spray Balls

Stationary Spray Balls - *STC*

Features:

- typically use in food and beverage for cleaning storage tanks
- various spray patterns available (blanks available as special order)
- stationary - designed to be mounted to a tube or pipe
- 2mm spray holes

Size	Pin Length	Spray Pattern	A	B	C	D	E	Pin Size	*316L Stainless Steel* Part Number
1"	1.47	360°	2.50	3.04	1.005	.975	.445	.226	***STC-360-R100***
1½"	1.95	360°	2.95	3.55	1.505	1.050	.445	.226	***STC-360-R150***
1"	1.47	180° bottom	3.54	2.95	1.005	.975	.445	.226	***STC-180B-R100***
1½"	1.95	180° bottom	3.54	2.95	1.505	.975	.445	.226	***STC-180B-R150***
1"	1.47	180° top	3.54	2.95	1.005	.975	.445	.226	***STC-180T-R100***
1½"	1.95	180° top	3.54	2.95	1.505	.975	.445	.226	***STC-180T-R150***

1" pin length = 1.47
1½" pin length = 1.95

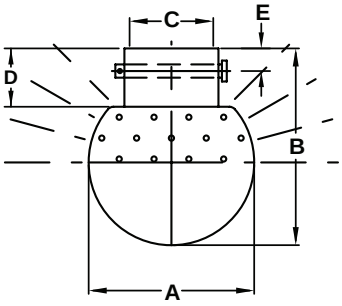

180° Top Pattern

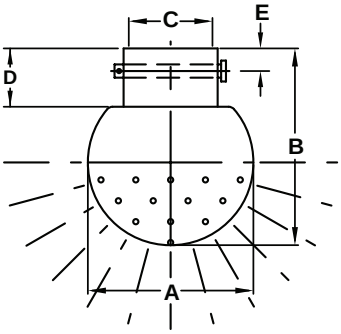

180° Bottom Pattern

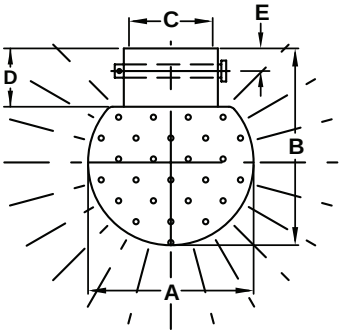

360° Pattern

Repair Kits

Size	Part Number
1"	***STC-RK100***
1½"	***STC-RK150***

Repair kits contain:
(1) pin
(1) R clip

Technical Data

Cleaning Radius

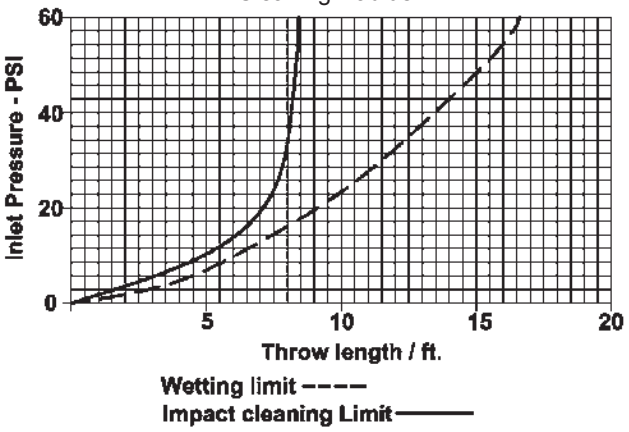

Flow Rate

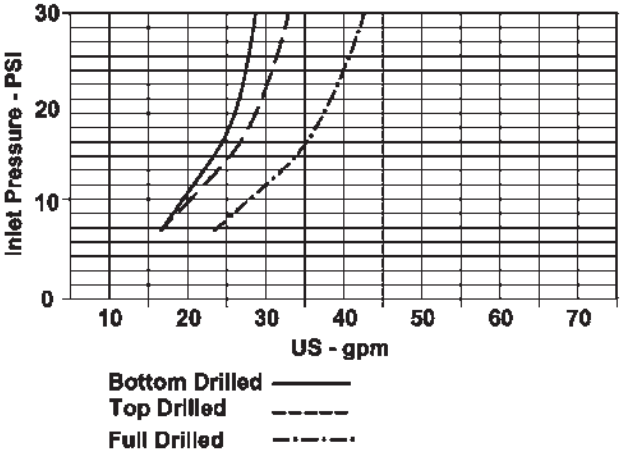

Washdown Accessories

Spray Nozzles - *BWSG*

Applications:
For low pressure cleaning and sanitation applications, such as food and dairy processing, tank and drum cleaning, pharmaceutical and chemical manufacturing and meat and poultry packing.

Features:
- efficient design for operator comfort
- variable spray pattern from solid stream to 50° hollow cone
- hose connects at base of gun for easy maneuvering
- ½" female NPT inlet
- rubber coated handle protects hands from water temperatures to **150°F**
- **12.5 GPM** flow capacity at **150 PSI**
- *Do not use with steam lines.*

Cover color	*Brass* Part Number
black	***BWSG***
white	***BWSG-W***

Swivel Connectors - *BNS*

Features:
- brass swivel body
- brass connecting nut
- stainless steel hose shank
- EPDM gasket

NPT Size	Hose Size	Part Number
½"	½"	***BNS44***
¾"	¾"	***BNS64***

Hot Water Washdown Hose - *SWDSHOSE*

Features:
- smooth extruded Chlorobutyl tube
- white, wrapped Neoprene cover (.075" thick), braided textile reinforcement
- furnished with internal stainless steel spring guards at both ends
- ¾" male on one end and ½" male on the other
- working pressure: **250 PSI**
- temperature to: **200°F**

Size	Length	Part Number
5/8"	25'	***SWDSHOSE25***
5/8"	50'	***SWDSHOSE50***

Water-Steam Washdown Station

Features:
Fail-safe mixing station, bronze, wall mounted, safely blends steam and cold water for hot water on demand. Should cold water fail, the steam is instantly shut-off. **150 PSI** maximum, **200°F** maximum.

Unit is furnished with the following:

- control valves
- dial thermometer
- in-line check valves
- ¾" inlet and outlet
- stainless steel hose rack
- mounting plate and hardware

Part Number
SWDS

Pressure Requirements

Steam Pressure		*Water* Pressure	
Minimum	Maximum	Minimum	Maximum
80 PSI	**150 PSI**	**50 PSI**	**80 PSI**

Hot and Cold Water Mixing Station

Features:
Hot and cold water mixing station, bronze, wall mounted.
150 PSI maximum, **200°F** maximum.

Unit is furnished with the following:

- control valves (globe style)
- in-line check valves
- ¾" inlet and outlet
- stainless steel hose rack
- mounting plate and hardware

Part Number
WDS1

Rack for Mixing Station

Features:
Designed to hold 50' of ¾" heavy duty industrial grade hose.

- heavy duty stainless steel construction
- stainless steel lag screws
- heavy duty solid brass mounting crowns
- supplied with mounting hardware
- rack fits SWDS and WDS1 mixing stations

Part Number
WDSR

Maintenance

Jax Food Grade Penetrating Oil

Features:
- NSF H1 registered for incidental food contact
- colorless, odorless and tasteless
- quickly frees corroded parts
- protects metal from corrosion
- lubricates moving parts

Description	Part Number
16 fl.oz. trigger spray bottle	***LUPO-16***

PurGel Klear

Features:
- meets FDA 21 CFR Part 172: Food Additive Permitted for direct addition to food for human consumption and Part 178: Indirect Food Additives
- pure White, FDA approved kosher petrolatum for use as a release agent
- use for any assembly, barrier or release applications holding O-rings or gaskets or coating cutting blades or augers

Description	Part Number
8 oz. squeeze tube	***LUPG-08***

Food Grade Anti-Seize

Features:
- NSF H1 registered for incidental food contact
- non-toxic and non-drying
- lubricates threads
- forms leak-proof seals
- prevents corrosion
- resists water and steam

Description	Part Number
8 oz. bottle with brush-top cap	***LUAS-08***

Stainless Steel Cleaner & Polish

Features:
- A7 Registered for use in federally-inspected facilities
- repels water – beads up like wax
- [rovides high-gloss protective shield
- dissolves tarnish
- rubs in completely, with no dust or residue

Description	Part Number
14 oz. aerosol can	***LUCP-14***

All products shipped with MSDS (Material Safety Data Sheets)

Thread Sealant Paste

Feature:
- temperature range: **-300°F** to **500°F**

Can Size	Part Number
¼ pint	***LCTS14***
½ pint	***LCTS1***
1 pint	***LCTS2***
1 quart	***LCTS3***

PTFE Tape

Industrial PTFE Tape *(white)*

Features:
- meets Military Specification MIL-T-27730A
- thickness: 3.00 and 3.5 mil (.09 mm)
- temperature range: **-212°F** to **500°F**

Size	Length	Part Number
½"	260"	***TTA50***
½"	520"	***TTB50***
½"	1296"	***TTC50***
¾"	260"	***TTA75***
¾"	520"	***TTB75***
1"	520"	***TTB100***

Stainless Steel PTFE Tape *(gray)*

Features:
- thickness: 4 mil
- temperature range: **-58°F** to **600°F**
- meets Military Specification MIL-T-27730A
- TFE acts as a chemical protection and lubricant
- especially useful on stainless steel threaded joints or connections
- 100% PTFE with nickel added
- nickel acts like a ball bearing

Size	Length	Part Number
½"	260"	***TTA50SS***

Industrial Heavy Duty PTFE Tape *(pink)*

Features:
- thickness: 4 mil
- temperature range: **-400°F** to **500°F**

Size	Length	Part Number
½"	540"	***TTBP50***

Swivels

Product Specifications

Size range:
- 1" - 4" Tube OD

Materials:
- 316L stainless steel

Finish:
- sanitary finish ID and OD

Features:
- available in clamp and weld configurations
- elastomers: silicone and PTFE
- optional elastomers available

Index

Straight Swivel 140
Configurations 141

pressure ratings (straight swivels only)

Size	PSI at 70°F	PSI at 250°F
1"	500	300
1½"	500	300
2"	450	250
2½"	400	200
3"	350	175
4"	300	150

Straight Swivel - SJSS

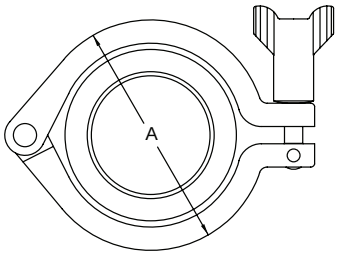

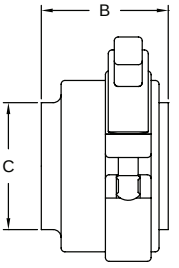

straight clamp dimensions - style 20

Part Number	Size	A	B	C
SJSS100CC-20	1.00	2.56	3.00	1.00
SJSS150CC-20	1.50	2.56	3.00	1.50
SJSS200CC-20	2.00	3.09	3.00	2.00
SJSS250CC-20	2.50	3.44	3.00	2.50
SJSS300CC-20	3.00	3.94	3.00	3.00
SJSS400CC-20	4.00	5.08	4.19	4.00

straight weld connection dimensions - style 20

Part Number	Size	A	B	C
SJSS100BB-20	1.00	2.56	2.00	1.00
SJSS150BB-20	1.50	2.56	2.00	1.50
SJSS200BB-20	2.00	3.09	2.00	2.00
SJSS250BB-20	2.50	3.44	2.00	2.50
SJSS300BB-20	3.00	3.94	2.00	3.00
SJSS400BB-20	4.00	5.08	2.94	4.00

All dimensions are in inches unless otherwise noted. Engineering dimensions are available upon request.
Specifications are subject to change without notice.

Straight Swivels - SJSS
Configurations

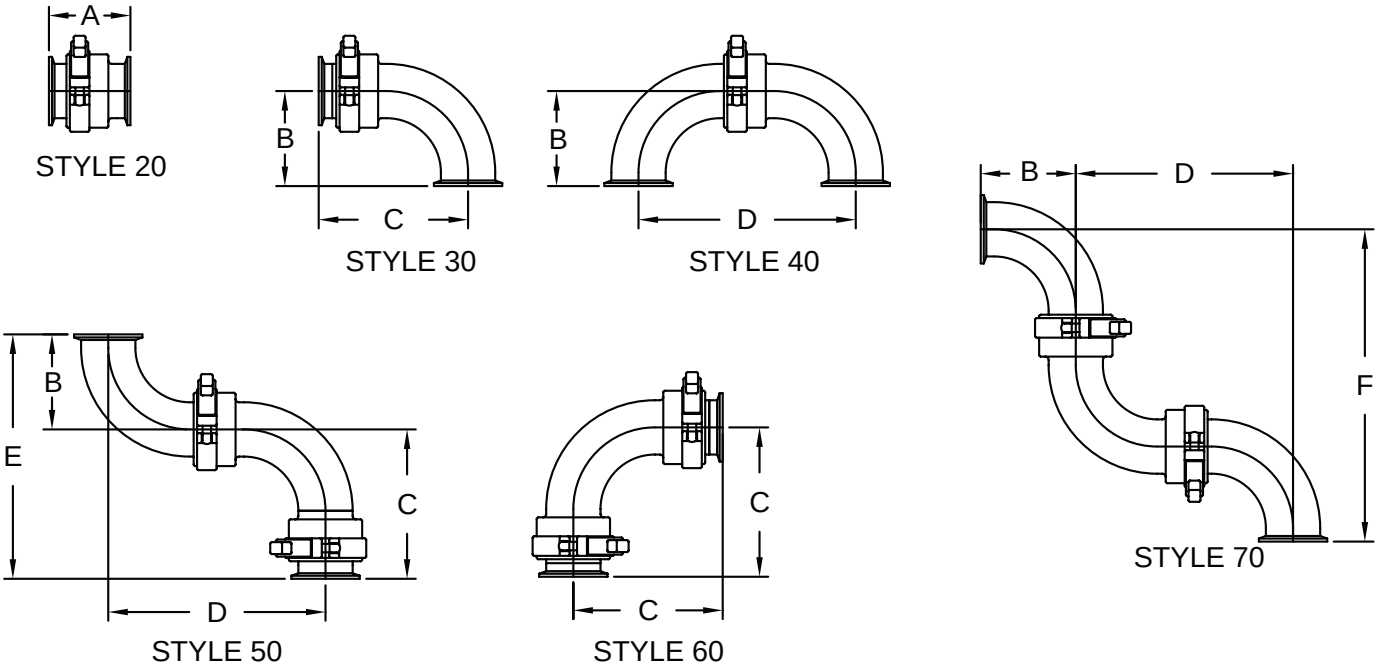

clamp joint dimensions

Part Number	Size	A	B	C	D	E	F
SJSS100CC-*	1"	3.00	2.00	4.00	5.00	6.00	7.00
SJSS150CC-*	1½"	3.00	2.75	4.75	6.50	7.50	9.25
SJSS200CC-*	2"	3.00	3.50	5.50	8.00	9.00	11.50
SJSS250CC-*	2½"	3.00	4.25	6.25	9.50	10.50	13.75
SJSS300CC-*	3"	3.00	5.00	7.00	11.00	12.00	16.00
SJSS400CC-*	4"	5.19	6.63	9.63	14.94	15.94	21.56

* For all other styles, please contact Dixon Sanitary for pricing

Cam & Groove

Cam & Groove Fitting Selection

Product Specifications

Size range:
- 1" - 4"

Materials:
- 316L stainless steel
  (316) CF8M
  aluminum

Index

Specifications 143
Drawings..... 144
Adapters 145-146
Dust Plugs 147
Couplers 147
Dust Caps..... 148
Replacement Handles 148
Reducing 149
Spools..... 150
Flanged..... 151
Gaskets 151-152

Cam & Groove

Dixon

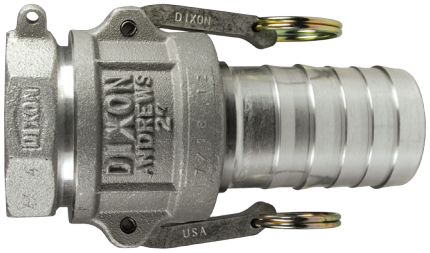

Features:
- Precision machined to rigid tolerances.
- Durable stainless steel cam arm pins will not rust or bind, for greater strength and safety.
- Recess holds gasket firmly in place - ensures proper placement.
- Long shank design allows proper banding, thus eliminating the major cause of hose damage.

Operation of Cam and Groove

1. To make connection, simply slide the adapter into the coupler and with normal hand pressure, press the cam levers down.
2. Uncoupling is as quick and simple as coupling. Just lift the cam arms and remove the adapter.

Ordering System

200 - A - AL

- AL → material
- A → style
- 200 → size

Size represents the coupler or adapter and hose or pipe end. (i.e. 200 = 2") If the coupling is a reducing size, the coupler or adapter is the first size. (i.e. 4030-C is 4" coupler to 3" hose shank).

Specifications on Dixon Cam and Groove

Specifications:
- Dixon cam and groove couplers and adapters are produced to interchange with all product produced to Commercial Item Description A-A-59326B.
- No standard exists for the ½" and 8" fittings, and generally these sizes do not interchange with other manufacturers.
- Dust caps and dust plugs are ***not*** to be used in pressure applications for safety and environmental reasons.
- *Designed for use with liquids*, consult Dixon for specific recommendations.

Pressure Ratings:

Recommendations based on the use of mating Dixon fittings at ambient temperature (**70°F**) with standard Buna-N Seal installed. For use at elevated temperature or other unusual operating conditions, consult the factory. Dixon, Boss-Lock and EZ Boss-Lock couplers and adapters maximum working pressure are as follows:

Size	½"	¾" thru 2"	2½"	3"	4"	5" and 6"	8"
PSI	**150**	**250**	**150**	**125**	**100**	**75**	**50**

All dimensions are in inches unless otherwise noted. Engineering dimensions are available upon request.
Specifications are subject to change without notice.

Cam & Groove Line Drawings

Line drawings are representative of the Dixon line of cam and groove.

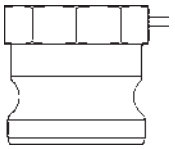

Type A
male adapter x female NPT

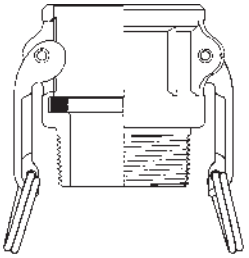

Type B
female coupler x male NPT

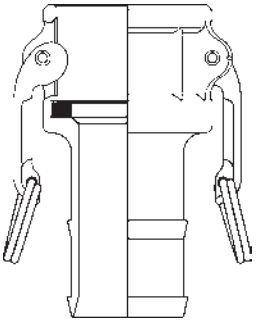

Type C
female coupler x hose shank

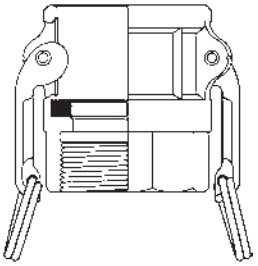

Type D
female coupler x female NPT

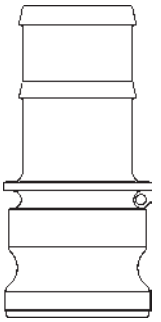

Type E
male adapter x hose shank

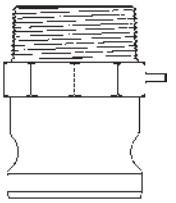

Type F
male adapter x male NPT

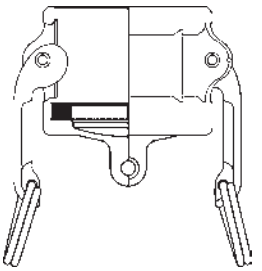

Type DC *
dust cap

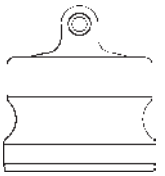

Type DP *
dust plug

Dust caps and dust plugs are ***not*** to be used in pressure applications for safety and environmental reasons.

Under no circumstances should cam and groove couplings be used for compressed air or steam service**!**

Cam & Groove Clamp Adapters

Coupler x Clamp End - *RC*

316 Stainless Steel Part Number
RC150SE
RC200SE
RC300SE

Adapter x Clamp End - *RE*

316 Stainless Steel Part Number
RE150SE
RE200SE
RE300SE

Dixon Weld to Tube Cam and Groove

Features:
- 316 stainless steel investment casting
- designed to be welded to standard sanitary tubing

Boss-Lock coupler x weld to tube end

Feature:
- does not have a sanitary polish

Size	*316 Stainless Steel* Part Number
1"	***RC100BT***
1½"	***RC150BT***
2"	***RC200BT***
3"	***RC300BT***

adapter x weld to tube end

Feature:
- does not have a sanitary polish

Size	*316 Stainless Steel* Part Number
1"	***RE100BT***
1½"	***RE150BT***
2"	***RE200BT***
3"	***RE300BT***

Global Type A Adapters

Size	*A80 Aluminum* Part Number	*316 Investment Cast Stainless Steel* Part Number
½"	***G50-A-AL***	***---***
¾"	***G75-A-AL***	***G75-A-SS***
1"	***G100-A-AL***	***G100-A-SS***
1¼"	***G125-A-AL***	***G125-A-SS***
1½"	***G150-A-AL***	***G150-A-SS***
2"	***G200-A-AL***	***G200-A-SS***
2½"	***G250-A-AL***	***G250-A-SS***
3"	***G300-A-AL***	***G300-A-SS***
4"	***G400-A-AL***	***G400-A-SS***

Global Type E Adapters

Size	*A80 Aluminum* Part Number	*316 Investment Cast Stainless Steel* Part Number
½"	***G50-E-AL***	***---***
¾"	***G75-E-AL***	***G75-E-SS***
1"	***G100-E-AL***	***G100-E-SS***
1¼"	***G125-E-AL***	***G125-E-SS***
1½"	***G150-E-AL***	***G150-E-SS***
2"	***G200-E-AL***	***G200-E-SS***
2½"	***G250-E-AL***	***G250-E-SS***
3"	***G300-E-AL***	***G300-E-SS***
4"	***G400-E-AL***	***G400-E-SS***

Global Type F Adapters

Size	*A80 Aluminum* Part Number	*316 Investment Cast Stainless Steel* Part Number
½"	***G50-F-AL***	***---***
¾"	***G75-F-AL***	***G75-F-SS***
1"	***G100-F-AL***	***G100-F-SS***
1¼"	***G125-F-AL***	***G125-F-SS***
1½"	***G150-F-AL***	***G150-F-SS***
2"	***G200-F-AL***	***G200-F-SS***
2½"	***G250-F-AL***	***G250-F-SS***
3"	***G300-F-AL***	***G300-F-SS***
4"	***G400-F-AL***	***G400-F-SS***

Global Type DP Dust Plugs

Size	*A80 Aluminum* Part Number	*316 Investment Cast Stainless Steel* Part Number
½"	***G50-DP-AL***	---
¾"	***G75-DP-AL***	***G75-DP-SS***
1"	***G100-DP-AL***	***G100-DP-SS***
1¼"	***G125-DP-AL***	***G125-DP-SS***
1½"	***G150-DP-AL***	***G150-DP-SS***
2"	***G200-DP-AL***	***G200-DP-SS***
2½"	***G250-DP-AL***	***G250-DP-SS***
3"	***G300-DP-AL***	***G300-DP-SS***
4"	***G400-DP-AL***	***G400-DP-SS***

Global Type B Couplers

Size	*A80 Aluminum* Part Number	*316 Investment Cast Stainless Steel* Part Number
½"	***G50-B-AL***	---
¾"	***G75-B-AL***	***G75-B-SS***
1"	***G100-B-AL***	***G100-B-SS***
1¼"	***G125-B-AL***	***G125-B-SS***
1½"	***G150-B-AL***	***G150-B-SS***
2"	***G200-B-AL***	***G200-B-SS***
2½"	***G250-B-AL***	***G250-B-SS***
3"	***G300-B-AL***	***G300-B-SS***
4"	***G400-B-AL***	***G400-B-SS***

Global Type C Couplers

Size	*A80 Aluminum* Part Number	*316 Investment Cast Stainless Steel* Part Number
½"	***G50-C-AL***	---
¾"	***G75-C-AL***	***G75-C-SS***
1"	***G100-C-AL***	***G100-C-SS***
1¼"	***G125-C-AL***	***G125-C-SS***
1½"	***G150-C-AL***	***G150-C-SS***
2"	***G200-C-AL***	***G200-C-SS***
2½"	***G250-C-AL***	***G250-C-SS***
3"	***G300-C-AL***	***G300-C-SS***
4"	***G400-C-AL***	***G400-C-SS***

Global Type D Couplers

Size	*A80 Aluminum* Part Number	*316 Investment Cast Stainless Steel* Part Number
½"	***G50-D-AL***	---
¾"	***G75-D-AL***	***G75-D-SS***
1"	***G100-D-AL***	***G100-D-SS***
1¼"	***G125-D-AL***	***G125-D-SS***
1½"	***G150-D-AL***	***G150-D-SS***
2"	***G200-D-AL***	***G200-D-SS***
2½"	***G250-D-AL***	***G250-D-SS***
3"	***G300-D-AL***	***G300-D-SS***
4"	***G400-D-AL***	***G400-D-SS***

Global Type DC Dust Caps

Size	*A80 Aluminum* Part Number	*316 Investment Cast Stainless Steel* Part Number
½"	***G50-DC-AL***	*---*
¾"	***G75-DC-AL***	***G75-DC-SS***
1"	***G100-DC-AL***	***G100-DC-SS***
1¼"	***G125-DC-AL***	***G125-DC-SS***
1½"	***G150-DC-AL***	***G150-DC-SS***
2"	***G200-DC-AL***	***G200-DC-SS***
2½"	***G250-DC-AL***	***G250-DC-SS***
3"	***G300-DC-AL***	***G300-DC-SS***
4"	***G400-DC-AL***	***G400-DC-SS***

Replacement Handle Assemblies for Global Couplers

For Aluminum and Brass Global Couplers

investment stainless

forged brass

Fits on Sizes	*Investment Stainless* Part Number	*Forged Brass* Part Number
¾"	***G75HRP***	*---*
1"	***G100HRP***	*---*
1½" - 2½"	*---*	***G152HRP***
3" and 4"	*---*	***G34HRP***

For Stainless Steel Global Couplers

investment stainless

Fits on Sizes	*Investment Stainless* Part Number
¾"	***G75HRPSS***
1"	***G100HRPSS***
1¼" - 2½"	***G125250HRPSS***
3" and 4"	***G300400HRPSS***

Reducing Cam and Groove Couplings

Feature:
- In reducing couplings, the cam and groove end is the first size given in the part number (i.e. a 4030-C-AL is a 4" coupler to a 3" hose shank.

Type A

Feature:
- Pressure rating is based on the seal of the mating part. See ratings on page 127.

male adapter x female NPT

Size	*Aluminum* Part Number	*316 Stainless Steel* Part Number
2" x 3"	***2030-A-AL***	***2030-A-SS***
3" x 2"	***3020-A-AL***	***3020-A-SS***
3" x 4"	***3040-A-AL***	*---*
4" x 3"	***4030-A-AL***	***4030-A-SS*** [1]

[1] Parts are produced as a welded fabrication.

Type F

Feature:
- Pressure rating is based on the seal of the mating part. See ratings on page 127.

male adapter x male NPT

Size	*Aluminum* Part Number	*316 Stainless Steel* Part Number
1½" x 2"	***1520-F-AL***	*---*
3" x 2"	***3020-F-AL***	***3020-F-SS***
3" x 4"	***3040-F-AL***	*---*
4" x 3"	***4030-F-AL***	***4030-F-SS*** [1]

[1] Parts are produced as a welded fabrication.

Type B

Feature:
- Couplers are supplied standard with a Buna-N gasket, other gasket types are available on pages 136.

female coupler x male NPT

Size	*Aluminum* Part Number	*316 Stainless Steel* Part Number
3" x 2"	***3020-B-AL***	***3020-B-SS*** [1]
3" x 4"	***3040-B-AL***	*---*
4" x 3"	***4030-B-AL***	***4030-B-SS*** [1]

[1] Parts are produced as a welded fabrication.

Dixon Reducing Cam and Groove Couplings

Features:
- Couplers are supplied standard with a Buna-N gasket, other gasket types are available on pages 136.
- In reducing cam and groove couplings, the coupler is the first size in the part number.

female coupler x male NPT

Size	*Aluminum* Part Number	*316 Stainless Steel* Part Number
1½" x 2"	***1520-DA-AL***	***1520-DA-SS***
2" x 1½"	***2015-DA-AL***	***2015-DA-SS***
2" x 3"	***2030-DA-AL***	***2030-DA-SS***
3" x 2"	***3020-A-AL***	***3020-DA-SS***
3" x 4"	***3040-DA-AL***	***3040-DA-SS***
4" x 2"	***4020-DA-AL***	***4020-DA-SS*** [1]
4" x 3"	***4030-DA-AL***	***4030-DA-SS***

[1] Parts are produced as a welded fabrication.

Dixon Spool Adapters

increaser / reducer

same size

Feature:

- Pressure rating is based on the seal of the mating part. See ratings on page 127.

adapter x adapter

Size	*Aluminum* Part Number	*316 Stainless Steel* Part Number
2"	***200-AA-AL***	***200-AA-SS***
2" x 3"	***2030-AA-AL***	***2030-AA-SS***
3"	***300-AA-AL***	***300-AA-SS***
3" x 4"	***3040-AA-AL***	***3040-AA-SS*** [1]
4"	***400-AA-AL***	***400-AA-SS***

[1] Parts are produced as a welded fabrication.

Dixon Spool Couplers

reducer / increaser

same size

Feature:

- Couplers are supplied standard with a Buna-N gasket, other gasket types are available on pages 136.

coupler x coupler

Size	*Aluminum* Part Number	*316 Stainless Steel* Part Number
2"	***200-DD-AL***	***200-DD-SS***
2" x 3"	***2030-DD-AL***	***2030-DD-SS***
3"	***300-DD-AL***	***300-DD-SS***
3" x 4"	***3040-DD-AL***	***3040-DD-SS*** [1]
4"	***400-DD-AL***	***400-DD-SS***

[1] Parts are produced as a welded fabrication.

Adapters and Couplers x 150# Flanged Drilling

Dixon adapter x 150# flange

Size	*Aluminum* Part Number	*316 Stainless Steel* Part Number	Approximate Flange Thickness
1½"	---	***150-AL-SS***	5/8"
2"	***200-AL-AL***	***200-AL-SS***	7/16"
3"	***300-AL-AL***	***300-AL-SS***	7/16"
4"	***400-AL-AL***	***400-AL-SS***	7/16"

Feature:

- Couplers are supplied standard with a Buna-N gasket, other gasket types are available on pages 136.

Dixon coupler x 150# flange

Size	*Aluminum* Part Number	*316 Stainless Steel* Part Number	Approximate Flange Thickness
1½"	---	***150-DL-SS***	25/32"
2"	***200-DL-AL***	***200-DL-SS***	7/16"
3"	***300-DL-AL***	***300-DL-SS***	7/16"
4"	***400-DL-AL***	***400-DL-SS***	7/16"

Cam and Groove Gaskets

Feature:

- White neoprene and white Buna-N gaskets all contain FDA approved materials.

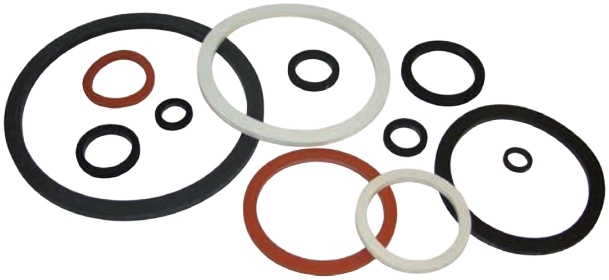

Size	*Buna-N* Part Number	*FKM* Part Number	*Neoprene* Part Number	*white Neoprene* Part Number	*white Buna-N* Part Number	*Silicone* Part Number
½"	***50-G-BU***	***50-G-VI***	---	---	---	---
¾"	***75-G-BU***	***75-G-VI***	***75-G-NE***	---	---	---
1"	***100-G-BU***	***100-G-VI***	***100-G-NE***	---	---	---
1¼"	***125-G-BU***	***125-G-VI***	***125-G-NE***	---	---	---
1½"	***150-G-BU***	***150-G-VI***	***150-G-NE***	***150-G-WNE***	---	***150-G-SIL***
2"	***200-G-BU***	***200-G-VI***	***200-G-NE***	***200-G-WNE***	---	***200-G-SIL***
2½"	***250-G-BU***	***250-G-VI***	***250-G-NE***	---	---	---
3"	***300-G-BU***	***300-G-VI***	***300-G-NE***	***300-G-WNE***	***300-G-WB***	***300-G-SIL***
4"	***400-G-BU***	***400-G-VI***	***400-G-NE***	***400-G-WNE***	***400-G-WB***	***400-G-SIL***

Dixon Cam and Groove Gasket Dimensions

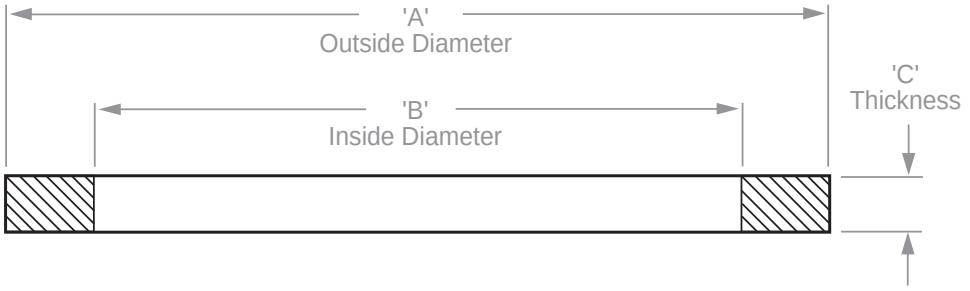

Features:

- The following are the nominal dimensions for Dixon's elastomeric cam and groove gaskets.
- The ID's of the PTFE envelope gaskets and the PTFE accordion gaskets are *1/16" smaller than* the ID's for the elastomeric gaskets shown below.
- Thickness of PTFE accordion gaskets may vary from chart below.

Size	Part Number	'A'	'B'	'C'
½"	***50-G***[1]	1-1/32"	11/16"	.156"
¾"	***75-G***	1-3/8"	7/8"	.218"
1"	***100-G***	1-9/16"	1-1/16"	.250"
1¼"	***125-G***	1-15/16"	1-23/64"	.250"
1½"	***150-G***	2-3/16"	1-5/8"	.250"
2"	***200-G***	2-5/8"	2"	.250"
2½"	***250-G***	3-1/8"	2-3/8"	.250"
3"	***300-G***	3-23/32"	3"	.250"
4"	***400-G***	4-7/8"	4"	.250"
5"	***500-G***	5-15/16"	4-7/8"	.250"
6"	***600-G***	7-1/16"	6"	.250"
8"	***800-G***[1]	9-5/16"	8-1/8"	.343"

[1] No interchange standard exists for the ½" fittings. Generally, these sizes do not interchange with other manufacturer's products. As such, the gaskets in these sizes are not suitable for use in other manufacturers' couplings.

Dixon Cam and Groove Gasket Color Codes

Gasket Code	Gasket Material	Material Color	Color code stripes (*appear on the OD of the gasket or filler*)
-BU	Buna-N (*standard in all metal fittings*)	black	1 blue
-VI	FKM	black	1 yellow
-NE	Neoprene	black	1 red
-WNE	White Neoprene, *FDA approved material*	white	none
-WB	White Buna N, *FDA approved material*	white	blue
-SIL	Silicone	red	none

Since other manufacturer's coding systems vary,
this chart should not be used as a reference in identifying gaskets of unknown origin.

Hose Fittings

Product Specifications

Size range:
- fittings: 1" - 4"
- clamps: 7/32" - 13"
- tubing: 3/8" OD - 2" OD

Materials:
- fittings: 304 stainless steel, 316 stainless steel, plated steel
- clamps: SAE 300 series stainless steel
- tubing: clear PVC

Hose Fitting Selection

Index

Internal Expansion Stems....154-155
Internal Expansion Ferrules....154
Crimp Stems....156
Crimp Ferrules....156
King Combination Nipples....157
Stainless Insert....157
Hose Barb Fittings....158
Worm Gear Clamps....159
T-bolt Clamps....160
PVC Tubing....161

CIP Internal Expansion (IX) Sanitary Style Hose Couplings

Features:
- Clean-In-Place (CIP) compliant
- Flow Chief internal expansion (IX) fittings are only to be used with Flow Chief stainless steel ferrules.
- Flow Chief Sanitary fittings are used in the food, dairy and beverage industries.

NEW FOR 2013

Sanitary Clamp End Stems

Features:
- see pages 24-31 for sanitary style gaskets
- see pages 8-10 for sanitary style clamps
- special plug is required to expand CIP compliant fittings
- special adapter plate is required to expand 1½" CIP compliant fittings
- 3A compliant when assembled by 3A authorized hose shop

Size	*304 Stainless Steel* Part #
1½"	***IXSE24-3A***
2"	***IXSE32-3A***
3"	***IXSE48-3A***

Tube Weld End Stem

Feature:
- special plug is required to expand CIP compliant fittings

Size	*304 Stainless Steel* Part #
2"	***IXPE32-3A***

Special Expansion Plug for CIP Compliant IX Fittings

Size	*304 Stainless Steel* Part #
1½"	***IXFDPLG137***
2"	***IXFDPLG187***
3"	***IXFDPLG287***

Flow Chief Ferrules

Feature:
- the ferrule ID's are designed in increments of 1/16"

S Hose Fittings

Size	Hose OD From:	Hose OD To:	*304 Stainless Steel* Part #
1½"	1-56/64"	1-59/64"	***24PFX1.937***
	1-60/64"	1-63/64"	***24PFX2.000***
	2"	2-3/64"	***24PFX2.062***
	2-4/64"	2-7/64"	***24PFX2.125***
	2-8/64"	2-11/64"	***24PFX2.187***
	2-12/64"	2-15/64"	***24PFX2.250***
	2-16/64"	2-19/64"	***24PFX2.312*** [2]
2"	2-28/64"	2-31/64"	***32PFX2.500***
	2-32/64"	2-35/64"	***32PFX2.562***
	2-36/64"	2-39/64"	***32PFX2.625***
	2-40/64"	2-43/64"	***32PFX2.687***
	2-44/64"	2-47/64"	***32PFX2.750***
	2-48/64"	2-51/64"	***32PFX2.812***
	2-52/64"	2-55/64"	***32PFX2.875***
	2-56/64"	2-59/64"	***32PFX2.937***
3"	3"	3-3/64"	***40PFX3.062***
	3-4/64"	3-7/64"	***40PFX3.125***
3"	3-8/64"	3-11/64"	***40PFX3.187***
	3-12/64"	3-15/64"	***40PFX3.250***
	3-16/64"	3-19/64"	***40PFX3.312***
	3-20/64"	3-23/64"	***40PFX3.375***
	3-28/64"	3-31/64"	***40PFX3.500***
	3-32/64"	3-35/64"	***48PFX3.562***
	3-36/64"	3-39/64"	***48PFX3.625***
	3-40/64"	3-43/64"	***48PFX3.687***
	3-44/64"	3-47/64"	***48PFX3.750***
	3-48/64"	3-51/64"	***48PFX3.812***
	3-52/64"	3-55/64"	***48PFX3.875***
	3-56/64"	3-59/64"	***48PFX3.937***
	3-60/64"	3-63/64"	***48PFX4.000***
4"	4"	4-3/64"	***48PFX4.062***
	4-4/64"	4-7/64"	***48PFX4.125***
	4-36/64"	4-39/64"	***64PFX4.625***
	4-40/64"	4-43/64"	***64PFX4.687***
	4-44/64"	4-47/64"	***64PFX4.750***
	4-48/64"	4-51/64"	***64PFX4.812***
	4-52/64"	4-55/64"	***64PFX4.875***
	4-56/64"	4-59/64"	***64PFX4.937***

[1] 1½" and 2" ferrules do not have serrations on the ID
[2] consult the factory for working pressure

Internal Expansion (IX) Sanitary Style Hose Couplings

NEW FOR 2013

Features:
- sanitary clamp style end
- Flow Chief internal expansion (IX) fittings are only to be used with Flow Chief stainless steel ferrules
- see pages 24-31 for sanitary style gaskets
- see pages 8-10 for sanitary style clamps

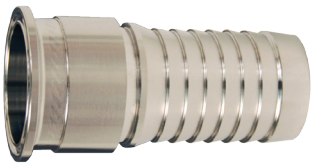

Size	*304 Stainless Steel* Part #
1½"	***IXSE24***
2"	***IXSE32***
2½"	***IXSE40***
3"	***IXSE48***
4"	***IXSE64***

Internal Expansion (IX) Male NPT Hose Couplings

Feature:
- Flow Chief internal expansion (IX) fittings are only to be used with Flow Chief stainless steel ferrules

Size	*304 Stainless Steel* Part #
1½"	***IXMS24***
2"	***IXMS32***
2½"	***IXMS40***
3"	***IXMS48***
4"	***IXMS64***

Internal Expansion (IX) Bevel Seat Hose Couplings

Features:
- Flow Chief internal expansion (IX) fittings are only to be used with Flow Chief stainless steel ferrules
- see page 47-48 for bevel seat gaskets

Female Shank

Feature:
- only use with the IXAN nuts shown below

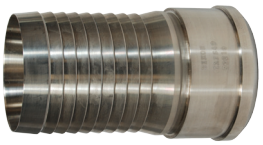

Size	*304 Stainless Steel* Part #
1½"	***IXFS24***
2"	***IXFS32***
2"	***IXFS32-3A*** [1] NEW
2½"	***IXFS40***
3"	***IXFS48***
4"	***IXFS64***

[1] must use plug part # IXFDPLG187

Threaded Hex Nuts

series 13H *(modified)*

Size	*304 Stainless Steel* Part #
1½"	***IXAN24***
2"	***IXAN32***
2½"	***IXAN40***
3"	***IXAN48*** [1]
4"	***IXAN64***

[1] modified for use on CBSR300: ***IXAN300***

Dixon Sanitary Style Crimp Stems

Sanitary End x Hose Shank

Features:
- sanitary style end
- Dixon sanitary crimp stems are only to be used with Dixon sanitary stainless steel crimp ferrules

Size	*316 Stainless Steel* Part Number
1"	***CSSR100***
1½"	***CSSR150***
2"	***CSSR200***
3"	***CSSR300***
4"	***CSSR400***

Female Bevel Seat End x Hose Shank

Size	Nut Used	*316 Stainless Steel* Part Number
1"	13H-G100	***CBSR100***
1½"	IXAN24 *	***CBSR150***
2"	IXAN32 *	***CBSR200***
3"	IXAN300 *	***CBSR300***
4"	IXAN64 *	***CBSR400***

* Call Dixon Sanitary for information

Female I-Line End x Hose Shank

Size	*316 Stainless Steel* Part Number
1½"	***CILR150***
2"	***CILR200***
3"	***CILR300***
4"	***CILR400***

Tube Weld End x Hose Shank

Size	*316 Stainless Steel* Part Number
1½"	***CTER150***
2"	***CTER200***
3"	***CTER300***
4"	***CTER400***

Dixon Sanitary Crimp Ferrules

Features:
- manufactured in AISI 304 stainless steel
- ferrules have a surface finish of 63 or better

Hose ID	Hose OD from	Hose OD to	*304 Stainless Steel* Part Number
1"	1-26/64"	1-28/64"	***F16G-1453***
	1-29/64"	1-31/64"	***F16G-1500***
	1-32/64"	1-34/64"	***F16G-1547***
	1-35/64"	1-37/64"	***F16G-1594***
	1-38/64"	1-40/64"	***F16G-1641***
	1-58/64"	1-61/64"	***F24G-1969***
1½"	1-62/64"	2-1/64"	***F24G-2031***
	2-2/64"	2-5/64"	***F24G-2094***
	2-6/64"	2-9/64"	***F24G-2156***

Hose ID	Hose OD from	Hose OD to	*304 Stainless Steel* Part Number
2"	2-30/64"	2-33/64"	***F32G-2531***
	2-34/64"	2-37/64"	***F32G-2594***
	2-38/64"	2-41/64"	***F32G-2656***
	2-42/64"	2-45/64"	***F32G-2719***
3"	3-39/64"	3-42/64"	***F48G-3625***
	3-40/64"	3-43/64"	***F48G-3688***
	3-44/64"	3-47/64"	***F48G-3750***
	3-48/64"	3-51/64"	***F48G-3813***
	3-52/64"	3-55/64"	***F48G-3875***
	3-56/64"	3-59/64"	***F48G-3938***
4"	4-40/64"	4-43/64"	***F64G-4688***
	4-44/64"	4-47/64"	***F64G-4750***
	4-48/64"	4-51/64"	***F64G-4813***
	4-52/64"	4-55/64"	***F64G-4875***
	4-56/64"	4-59/64"	***F64G-4938***

King Combination Nipples

WARNING

Features:

- Combination nipples are recommended for low-pressure discharge and suction service for compatible liquids. **They are not for compressible products such as air or nitrogen on sizes 1¼" and above.**
- **King Combination Nipples are not recommended for steam**.
- *The working pressure may vary with the construction of the hose, the type of clamping system used and the application. Consult the factory for recommendations.*
- In accordance with the R.M.A. bulletin for oil suction and discharge hose, a coupled length of hose in any size, should be tested to 1½ times the working pressure and held for fifteen minutes without leaking or coupling movement. For additional information and detailed instruction on testing procedures, see the Rubber Manufacturers Association (R.M.A.) handbook.

Size	A	B	C	D	*316 Stainless Steel* Part Number	*Plated Steel* Part Number
½"	3-5/16	1-11/16	17/32	7/32	***RST1 ****	***STC1***
¾"	3-1/4	1-19/32	25/32	9/16	***RST5 ****	***STC5***
1"	3-9/16	1-5/8	1-1/32	25/32	***RST10***	***STC10***
1¼"	3-15/16	1-3/4	1-9/32	1-1/16	***RST15***	***STC15***
1½"	4-5/32	2-7/32	1-17/32	1-5/16	***RST20***	***STC20***
2"	4-11/16	2-9/32	2-1/32	1-25/32	***RST25***	***STC25***
2½"	5-9/16	2-25/32	2-17/32	2-3/16	***RST30***	***STC30***
3"	6	3-3/16	3-1/32	2-11/16	***RST35***	***STC35***
4"	7-5/16	4-1/32	4-1/32	3-21/32	***RST40***	***STC40***
5"	9	5-5/32	5-1/32	4-11/16	***RST50***	***STC50***
6"	11	6-1/4	6-3/64	5-5/8	***RST60***	***STC60***
8"	12-1/8	7-5/16	8-3/64	7-9/16	***RST80***	***STC80***

* made from casting

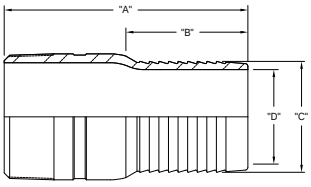

316 Stainless Steel Inserts

Hose Size	NPT Size	Part Number
1/8"	1/8"	***RN11***
3/16"	1/8"	***RN151***
3/16"	1/4"	***RN152***
1/4"	1/8"	***RN21***
1/4"	1/4"	***RN22***
1/4"	3/8"	***RN23***
5/16"	1/8"	***RN251***
5/16"	1/4"	***RN252***
5/16"	3/8"	***RN253***
3/8"	1/8"	***RN31***
3/8"	1/4"	***RN32***
3/8"	3/8"	***RN33***
3/8"	1/2"	***RN34***
1/2"	1/4"	***RN42***
1/2"	3/8"	***RN43***
1/2"	1/2"	***RN44***
1/2"	3/4"	***RN46***
5/8"	3/8"	***RN53***
5/8"	1/2"	***RN54***
5/8"	3/4"	***RN56***
3/4"	1/2"	***RN64***
3/4"	3/4"	***RN66***
1"	3/4"	***RN86***
1"	1"	***RKHN881***

Hose Barb Fittings
Garden Hose Thread

Male Fittings - *590*

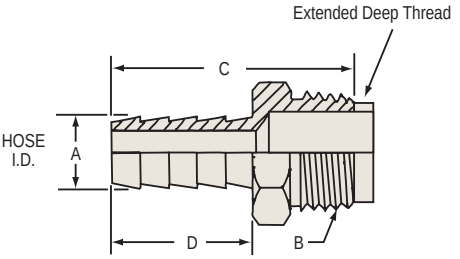

Size	A	B	C	D	Hex Size	*Stainless Steel* Part Number
1/2"	1/2	¾ - 11½	1.94	1.19	1-1/16	***5900812SS***
5/8"	5/8	¾ - 11½	1.94	1.19	1-1/16	***5901012SS***
3/4"	3/4	¾ - 11½	1.94	1.19	1-1/16	***5901212SS***

Female Swivel Fittings - *591*

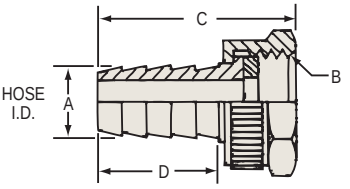

Size	A	B	C	D	Hex Size	*Stainless Steel* Part Number
1/2"	1/2	¾ - 11½	1.82	1.19	1-3/16	***5910812SS***
5/8"	5/8	¾ - 11½	1.82	1.19	1-3/16	***5911012SS***
3/4"	3/4	¾ - 11½	1.82	1.19	1-3/16	***5911212SS***

Male and Female Sets - *592*

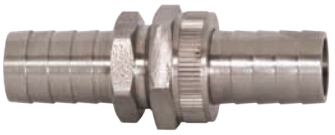

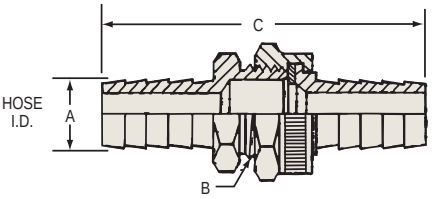

Size	A	B	C	*Stainless Steel* Part Number
1/2"	1/2	¾ - 11½	3.32	***5920808KSS***
5/8"	5/8	¾ - 11½	3.32	***5921010KSS***
3/4"	3/4	¾ - 11½	3.32	***5921212KSS***

Dixon Worm Gear Clamps

Features:
- four-piece construction
- clamp meets SAEJ1508 which supercedes Mil Spec WW-C-440B
- screw design: 5/16" slotted hex head
- maximum recommended torque 50 in. lbs.
- *all clamps sold 10 per box*

material:
- band and housing: SAE 201/301 series stainless
- screw: SAE 300 series stainless

Band Width	Hose OD from	Hose OD to	Part Number
1/2"	28/64"	50/64"	***HSS6***
	32/64"	58/64"	***HSS8***
	36/64"	1-4/64"	***HSS10***
	44/64"	1-16/64"	***HSS12***
	52/64"	1-32/64"	***HSS16***
	52/64"	1-48/64"	***HSS20***
	1-4/64"	2"	***HSS24***
	1-20/64"	2-16/64"	***HSS28***
	1-36/64"	2-32/64"	***HSS32***
	1-52/64"	2-48/64"	***HSS36***
	2-4/64"	3"	***HSS40***
	2-20/64"	3-16/64"	***HSS44***
	2-36/64"	3-32/64"	***HSS48***
	2-52/64"	3-48/64"	***HSS52***
	3-4/64"	4"	***HSS56***
	3-20/64"	4-16/64"	***HSS60***
	3-36/64"	4-32/64"	***HSS64***
	1-56/64"	5"	***HSS72***
	2-32/64"	5-32/64"	***HSS80***
	3-8/64"	6"	***HSS88***
	3-40/64"	6-32/64"	***HSS96***
	4-8/64"	7"	***HSS104***
	5-40/64"	8-32/64"	***HSS128***
9/16"	7-8/64"	10"	***HSS152***
	9-24/64"	12-16/64"	***HSS188***
	10-8/64"	13"	***HSS200***
	10-56/64"	13-48/64"	***HSS212***
	11-40/64"	14-32/64"	***HSS224***
	12-24/64"	15-16/64"	***HSS236***
	13-8/64"	16"	***HSS248***
	17-8/64"	20"	***HSS312***

Miniature Worm Gear Clamps

Features:
- screw design: 1/4" slotted hex head
- maximum recommended torque 15 in. lbs.
- *all clamps sold 10 per box*
- meets SAE J1508

material:
- band and housing: SAE 300 series stainless
- screw: SAE 300 series stainless

Band Width	Hose OD from	Hose OD to	Part Number
5/16"	14/64"	40/64"	***MAH4***
	28/64"	50/64"	***MAH6***
	32/64"	58/64"	***MAH8***
	36/64"	1-4/64"	***MAH10***
	44/64"	1-16/64"	***MAH12***
	60/64"	1-32/64"	***MAH16***
	1-12/64"	1-48/64"	***MAH20***

T-Bolt Hose Clamps

Features:

- T-bolts can be applied with a standard 7/16" socket wrench
- 3/4" wide 300 series stainless steel band, .025" thick
- 300 series stainless steel bolt, torque rating 50 in/lbs

Hose OD from	Hose OD to	Part Number
1.250"	1.4063"	***STBC131***
1.344"	1.562"	***STBC150***
1.474"	1.692"	***STBC163***
1.594"	1.812"	***STBC175***
1.724"	1.942"	***STBC188***
1.844"	2.062"	***STBC200***
1.964"	2.182"	***STBC212***
2.094"	2.312"	***STBC225***
2.224"	2.442"	***STBC238***
2.344"	2.562"	***STBC250***
2.326"	2.622"	***STBC256***
2.396"	2.692"	***STBC263***
2.516"	2.812"	***STBC275***
2.646"	2.942"	***STBC288***
2.766"	3.062"	***STBC300***
2.886"	3.182"	***STBC312***
3.016"	3.312"	***STBC325***
3.266"	3.562"	***STBC350***
3.386"	3.682"	***STBC362***
3.516"	3.812"	***STBC375***
3.586"	3.882"	***STBC382***
3.766"	4.062"	***STBC400***
4.016"	4.312"	***STBC425***
4.266"	4.562"	***STBC450***
4.516"	4.812"	***STBC475***
4.766"	5.062"	***STBC500***
5.016"	5.312"	***STBC525***
5.266"	5.562"	***STBC550***
5.516"	5.812"	***STBC575***
5.766"	6.062"	***STBC600***
6.016"	6.312"	***STBC625***
6.266"	6.562"	***STBC650***
6.516"	6.812"	***STBC675***
6.766"	7.062"	***STBC700***
7.016"	7.312"	***STBC725***
7.266"	7.562"	***STBC750***
7.766"	8.062"	***STBC800***
8.016"	8.312"	***STBC825***
8.266"	8.562"	***STBC850***
8.646"	8.942"	***STBC888***
8.766"	9.062"	***STBC900***
9.266"	9.562"	***STBC950***
9.766"	10.062"	***STBC1000***
10.646"	10.942"	***STBC1088***
11.766"	12.062"	***STBC1200***
12.646"	12.942"	***STBC1288***

Clear PVC Tubing

Clear PVC Tubing is designed to be used with standard shank fittings.
Tubing sold only in lengths shown below.

Features:
- imported
- temperature range: **14°F** to **149°F**
- shipped in bundles wrapped with PVC film

Size ID	Size OD	Working Pressure at 72°F	Length	Part Number
1/4"	3/8"	50	100	***ICL0406***
3/8"	1/2"	35	100	***ICL0608***
1/2"	5/8"	35	100	***ICL0810***
1/2"	3/4"	50	100	***ICL0812***
3/4"	1"	35	100	***ICL1216***
1"	1-1/4"	30	100	***ICL1620***
1-1/2"	2"	15	50	***ICL2432***

Air Fittings

Air Fitting Selection

Product Specifications

Size range:
- Fittings: 1/8" - 1/2"
- Tubing: 1/4" OD - 1/2" OD

Materials:
- Fittings: 303 stainless steel, nylon/nickel-plated brass, nickel-plated brass,
- Tubing: polyethylene

Index

DF Series.....164-166
F Series.....164-166
D Series.....163, 165-166
Legris Push-In Fittings.....167-169
Polyethylene Tubing.....170

DF- Series Pneumatic Couplings

Interchange Data:
- Parker 20-Series Manual Interchange (F-Series)
- Parker 30-Series Automatic Interchange (D-Series)
- Foster 3, 4, 5, and 6 Series

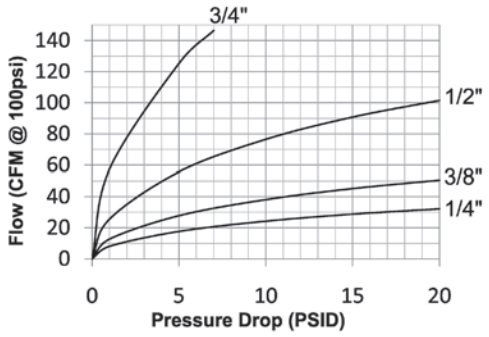

Materials:
- Machined components are manufactured using 303 stainless steel bar stock.
- Stainless steel balls, retaining rings, and springs maximize corrosion resistance and extend service life.

Seal Components:
- Nitrile (Buna-N) seals are standard, providing a temperature range of -40°F to +250°F (-40°C to +121°C).

Rated Pressure Chart
F-Series Manual Industrial Interchange (Connected)

Body Size	303 Stainless Coupler / Plug			
	Maximum Working		Burst	
	PSI	Bar	PSI	Bar
1/4"	500	35	11,500	795
3/8"	500	35	20,500	1,415
1/2"	500	35	15,000	1,035

DF Series Pneumatic Profile

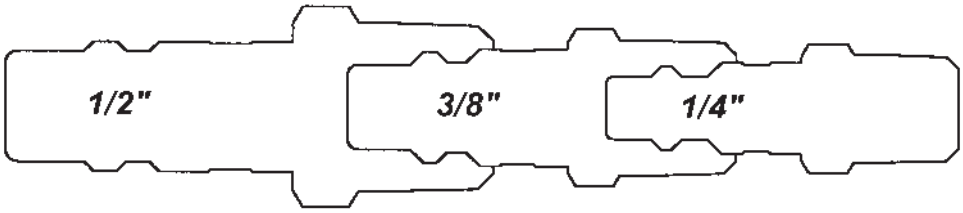

D-Series Automatic Industrial Interchange Coupler (female threads)

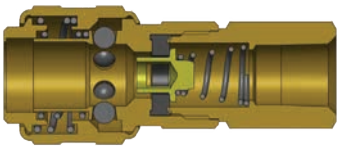

Body Size	Part Detail			Length		Maximum OD		Hex Inch	Wt Lb	
	Part Number	Threads	Material	Inch	mm	Inch	mm			
1/4"	***2DF2-B***	1/4" - 18 NPTF	brass	2.38	60.5	0.99	25.1	11/16"	0.28	NEW
1/4"	***2DF2-S***	1/4" - 18 NPTF	303 stainless	2.38	60.5	0.99	25.1	11/16"	0.29	
1/4"	***2DF3-B***	3/8" - 18 NPTF	brass	2.38	60.5	0.99	25.1	11/16"	0.30	NEW
3/8"	***3DF3-B***	3/8" - 18 NPTF	brass	2.60	66.0	1.26	32.0	7/8"	0.42	NEW
3/8"	***3DF3-S***	3/8" - 18 NPTF	303 stainless	2.60	66.0	1.26	32.0	7/8"	0.42	
1/2"	***4DF4-B***	1/2" - 14 NPTF	brass	3.30	83.8	1.38	35.1	1-1/16"	0.66	NEW
1/2"	***4DF4-S***	1/2" - 14 NPTF	303 stainless	3.30	83.8	1.38	35.1	1-1/16"	0.67	

F-Series Manual Industrial Interchange Coupler (female threads)

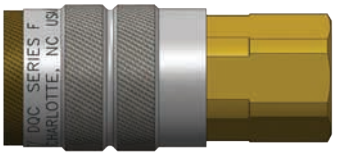

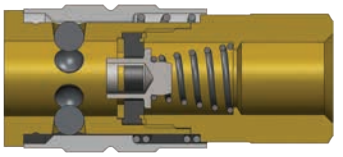

Body Size	Part Detail			Length		Maximum OD		Hex Inch	Wt Lb
	Part Number	Threads	Material	Inch	mm	Inch	mm		
1/4"	**2FF2-S**	1/4" - 18 NPTF	303 stainless	2.07	52.6	0.93	23.5	3/4"	0.20
NEW 1/4"	**2FF2-B**	1/4" - 18 NPTF	brass	2.07	52.6	0.93	23.5	3/4"	0.19
NEW 1/4"	**2FF3-B**	3/8" - 18 NPTF	brass	2.10	53.4	0.93	23.5	13/16"	0.19
1/4"	**2FF3-S**	3/8" - 18 NPTF	303 stainless	2.10	53.4	0.93	23.5	13/16"	0.18
NEW 3/8"	**3FF3**	3/8" - 18 NPTF	steel	2.41	61.2	1.13	23.5	7/8"	0.32
3/8"	**3FF3-S**	3/8" - 18 NPTF	303 stainless	2.41	61.2	1.13	28.6	7/8"	0.32
NEW 1/2"	**4FF4**	1/2" - 14 NPTF	steel	3.06	77.8	1.24	31.4	1"	0.56
1/2"	**4FF4-S**	1/2" - 14 NPTF	303 stainless	3.06	77.8	1.24	31.4	1"	0.56

DF-Series Industrial Interchange Nipple (female threads)

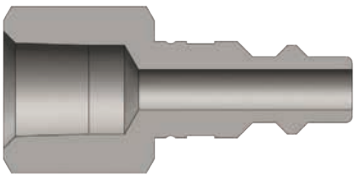

Body Size	Part Detail			Length		Maximum OD		Hex Inch	Wt Lb
	Part Number	Threads	Material	Inch	mm	Inch	mm		
NEW 1/4"	**D2F2**	1/4" - 18 NPTF	steel	1.66	42.2	0.79	20.1	11/16"	0.03
1/4"	**D2F2-S**	1/4" - 18 NPTF	303 stainless	1.66	42.2	0.79	20.1	11/16"	0.05
NEW 1/4"	**D2F3**	3/8" - 18 NPTF	steel	1.66	42.2	1.01	25.7	7/8"	0.08
1/4"	**D2F3-S**	3/8" - 18 NPTF	303 stainless	1.66	42.2	1.01	25.7	7/8"	0.08
NEW 3/8"	**D3F3**	3/8" - 18 NPTF	steel	1.78	45.2	1.01	25.7	7/8"	0.09
3/8"	**D3F3-S**	3/8" - 18 NPTF	303 stainless	1.78	45.2	1.01	25.7	7/8"	0.09
NEW 1/2"	**D4F4**	1/2" - 14 NPTF	steel	2.27	57.7	1.16	29.5	1"	0.17
1/2"	**D4F4-S**	1/2" - 14 NPTF	303 stainless	2.27	57.7	1.16	29.5	1"	0.17

D-Series Automatic Industrial Interchange Coupler (male threads)

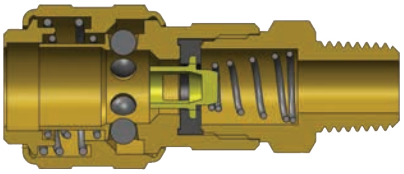

Body Size	Part Detail			Length		Maximum OD		Hex Inch	Wt Lb	
	Part Number	Threads	Material	Inch	mm	Inch	mm			
1/4"	**2DM1-B**	1/4" - 18 NPTF	brass	2.34	59.4	0.98	24.9	11/16"	0.28	NEW
1/4"	**2DM2-S**	1/4" - 18 NPTF	303 stainless	2.34	59.4	0.98	24.9	11/16"	0.29	
1/4"	**2DM3-B**	3/8" - 18 NPTF	brass	2.36	59.9	0.98	24.9	11/16"	0.28	NEW
3/8"	**3DM3-B**	3/8" - 18 NPTF	brass	2.73	69.3	1.18	30.0	7/8"	0.39	NEW
3/8"	**3DM3-S**	3/8" - 18 NPTF	303 stainless	2.73	69.3	1.18	30.0	7/8"	0.39	
1/2"	**4DM4-B**	1/2" - 14 NPTF	brass	3.17	80.5	1.34	34.0	1-1/16"	0.61	NEW
1/2"	**4DM4-S**	1/2" - 14 NPTF	303 stainless	3.17	80.5	1.34	34.0	1-1/16"	0.62	

F-Series Manual Industrial Interchange Coupler (male threads)

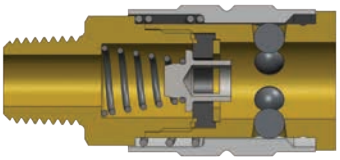

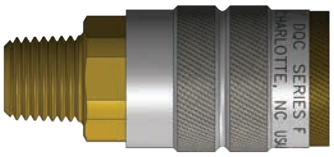

Body Size	Part Detail			Length		Maximum OD		Hex Inch	Wt Lb	
	Part Number	Threads	Material	Inch	mm	Inch	mm			
1/4"	**2FM1-S**	1/8" - 27 NPTF	303 stainless	1.97	50.0	0.88	22.4	3/4"	0.18	
1/4"	**2FM2-B**	1/4" - 18 NPTF	brass	2.04	51.8	0.88	22.4	3/4"	0.19	NEW
1/4"	**2FM2-S**	1/4" - 18 NPTF	303 stainless	2.04	51.8	0.88	22.4	3/4"	0.18	
1/4"	**2FM3-B**	3/8" - 18 NPTF	brass	2.08	52.8	0.88	22.4	3/4"	0.19	NEW
3/8"	**3FM3**	3/8" - 18 NPTF	steel	2.46	62.5	1.06	26.9	7/8"	0.27	NEW
3/8"	**3FM3-S**	3/8" - 18 NPTF	303 stainless	2.46	62.5	1.06	26.9	7/8"	0.28	
1/2"	**4FM4**	1/2" - 14 NPTF	steel	3.07	78.0	1.19	30.2	1"	0.45	NEW
1/2"	**4FM4-S**	1/2" - 14 NPTF	303 stainless	3.07	78.0	1.19	30.2	1"	0.47	

DF-Series Industrial Interchange Nipple (male threads)

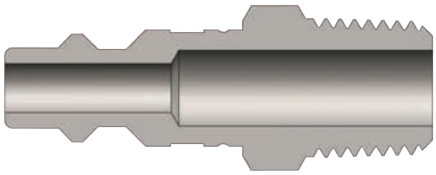

Body Size	Part Detail			Length		Maximum OD		Hex Inch	Wt Lb	
	Part Number	Threads	Material	Inch	mm	Inch	mm			
1/4"	**D2M1-S**	1/8" - 27 NPTF	303 stainless	1.57	39.9	0.58	14.7	1/2"	0.05	
1/4"	**D2M2**	1/4" - 18 NPTF	steel	1.69	42.9	0.65	16.5	9/16"	0.05	NEW
1/4"	**D2M2-S**	1/4" - 18 NPTF	303 stainless	1.69	42.9	0.65	16.5	9/16"	0.06	
1/4"	**D2M3**	3/8" - 18 NPTF	steel	1.75	44.5	0.79	20.1	11/16"	0.05	NEW
1/4"	**D2M3-S**	3/8" - 18 NPTF	303 stainless	1.75	44.5	0.79	20.1	11/16"	0.08	
3/8"	**D3M3**	3/8" - 18 NPTF	steel	1.87	47.5	0.79	20.1	11/16"	0.09	NEW
3/8"	**D3M3-S**	3/8" - 18 NPTF	303 stainless	1.87	47.5	0.79	20.1	11/16"	0.09	
1/2"	**D4M4**	1/2" - 14 NPTF	steel	2.34	59.4	1.01	25.7	7/8"	0.16	NEW
1/2"	**D4M4-S**	1/2" - 14 NPTF	303 stainless	2.34	59.4	1.01	25.7	7/8"	0.16	

D-Series Automatic Industrial Interchange Coupler (standard hose barb)

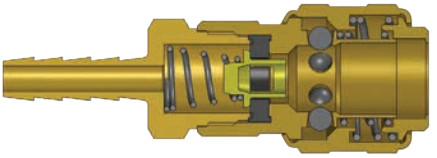

Body Size	Part Detail			Length		Maximum OD		Hex Inch	Wt Lb
	Part Number	Hose ID	Material	Inch	mm	Inch	mm		
NEW 1/4"	**2DS2-B**	1/4"	brass	2.90	73.7	0.98	24.9	11/16"	0.27
1/4"	**2DS2-S**	1/4"	303 stainless	2.90	73.7	0.98	24.9	11/16"	0.27
NEW 1/4"	**2DS3-B**	3/8"	brass	2.90	73.7	0.98	24.9	11/16"	0.27
1/4"	**2DS3-S**	3/8"	303 stainless	2.90	73.7	0.98	24.9	11/16"	0.28
NEW 3/8"	**3DS3-B**	3/8"	brass	3.00	76.2	1.18	30.0	7/8"	0.39
3/8"	**3DS3-S**	3/8"	303 stainless	3.00	76.2	1.18	30.0	7/8"	0.39
NEW 1/2"	**4DS4-B**	1/2"	brass	3.51	89.2	1.34	34.0	1-1/16"	0.59
1/2"	**4DS4-S**	1/2"	303 stainless	3.51	89.2	1.34	34.0	1-1/16"	0.59

F-Series Manual Industrial Interchange Coupler (standard hose barb)

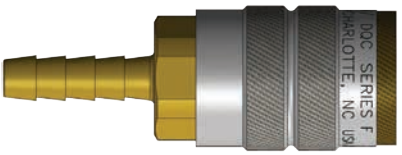

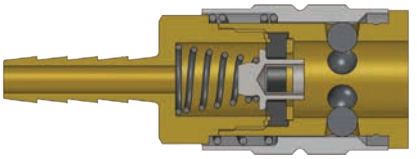

Body Size	Part Detail			Length		Maximum OD		Hex Inch	Wt Lb
	Part Number	Hose ID	Material	Inch	mm	Inch	mm		
NEW 1/4"	**2FS2-B**	1/4"	brass	2.53	64.3	0.88	22.4	3/4"	0.18
1/4"	**2FS2-S**	1/4"	303 stainless	2.53	64.3	0.88	22.4	3/4"	0.18
NEW 1/4"	**2FS3-B**	3/8"	brass	2.53	64.3	0.88	22.4	3/4"	0.18
1/4"	**2FS3-S**	3/8"	303 stainless	2.53	64.3	0.88	22.4	3/4"	0.19
NEW 1/4"	**3FS3**	3/8"	steel	2.86	72.6	1.06	26.9	7/8"	0.27
3/8"	**3FS3-S**	3/8"	303 stainless	2.86	72.6	1.06	26.9	7/8"	0.28
NEW 1/2"	**4FS4**	1/2"	steel	3.49	88.6	1.19	30.2	1"	0.43
1/2"	**4FS4-S**	1/2"	303 stainless	3.49	88.6	1.19	30.2	1"	0.48

DF-Series Industrial Interchange Nipple (standard hose barb)

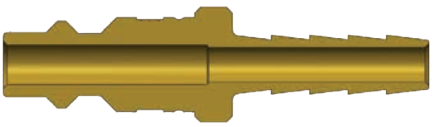

Body Size	Part Detail			Length		Maximum OD		Wt Lb
	Part Number	Hose ID	Material	Inch	mm	Inch	mm	
1/4"	**D2S2-S**	1/4"	303 stainless	2.09	53.1	0.56	14.2	0.05
1/4"	**D2S3-S**	3/8"	303 stainless	2.09	53.1	0.56	14.2	0.05
3/8"	**D3S3-S**	3/8"	303 stainless	2.21	56.1	0.75	19.1	0.08
1/2"	**D4S4-S**	1/2"	303 stainless	2.53	64.3	0.75	19.1	0.12

Nylon/Nickel-Plated Brass Legris Push-In Fittings

Features:

- materials:
  - nickel-plated brass threads; black body is glass-filled nylon; Buna-N D seal; polypropylene release button; silicone free
- positive seal: sealing and holding is accomplished instantaneously
- reusable: connect and disconnect numerous times
- full flow: fitting seals on outside diameter of tubing
- working pressure: fittings rated to **290 PSI** at ambient temperature. *Maximum circuit pressure depends equally on the type and diameter of the tube used.*
- working temperature: **-4°F** to **175°F**
- pre-applied thread sealant on all tapered male pipe threads
- compatible tubing: semi-rigid nylon, polyurethane and polyethylene tube
- vacuum capability: vacuum of 28" Hg (99% vacuum)

Gripping Ring Technology

Quick Connect and Disconnect:

- To connect, simply push tubing in.
- To disconnect, press the release ring towards the fitting and pull tubing out.
- No tools required.

Male Swivel Branch Tees

tube to male NPT

Tube OD	Male NPT	*Nylon/Nickel-plated Brass* Part Number
1/8"	10-32 *	***31085320***
1/8"	1/8"	***31085311***
5/32"	10-32 *	***31080420***
5/32"	1/8"	***31080411***
5/32"	1/4"	***31080414***
1/4"	1/8"	***31085611***
1/4"	1/4"	***31085614***
1/4"	3/8"	***31085618***
5/16"	1/8"	***31080811***
5/16"	1/4"	***31080814***
5/16"	3/8"	***31080818***
3/8"	1/8"	***31086011***
3/8"	1/4"	***31086014***
3/8"	3/8"	***31086018***
3/8"	1/2"	***31086022***
1/2"	1/4"	***31086214***
1/2"	3/8"	***31086218***
1/2"	1/2"	***31086222***

* UNF - Straight thread, supplied with gasket

Male Swivel Run Tees

tube to male NPT

Tube OD	Male NPT	*Nylon/Nickel-plated Brass* Part Number
1/8"	10-32 *	***31035320***
1/8"	1/16"	***31035308***
1/8"	1/8"	***31035311***
5/32"	10-32 *	***31030420***
5/32"	1/8"	***31030411***
5/32"	1/4"	***31030414***
1/4"	1/8"	***31035611***
1/4"	1/4"	***31035614***
1/4"	3/8"	***31035618***
5/16"	1/8"	***31030811***
5/16"	1/4"	***31030814***
3/8"	1/8"	***31036011***
3/8"	1/4"	***31036014***
3/8"	3/8"	***31036018***
1/2"	1/4"	***31036214***
1/2"	3/8"	***31036218***
1/2"	1/2"	***31036222***

* UNF - Straight thread, supplied with gasket

Nylon/Nickel-Plated Brass Legris Push-In Fittings

"Hybrid" Male Connectors

***fractional inch* tube to male BSPT**

Tube OD	Male BSPT	*Nickel-plated Brass* Part Number
1/4"	1/8"	***31755610***
1/4"	1/4"	***31755613***
3/8"	1/4"	***31756013***

Male Connectors

tube to male NPT

Tube OD	Male NPT	*Nickel-plated Brass* Part Number
1/8"	1/16"	***31755308***
1/8"	1/8"	***31755311***
1/8"	1/4"	***31755314***
5/32"	1/8"	***31750411***
5/32"	1/4"	***31750414***
1/4"	1/8"	***31755611***
1/4"	1/4"	***31755614***
1/4"	3/8"	***31755618***
5/16"	1/8"	***31750811***
5/16"	1/4"	***31750814***
5/16"	3/8"	***31750818***
3/8"	1/8"	***31756011***
3/8"	1/4"	***31756014***
3/8"	3/8"	***31756018***
3/8"	1/2"	***31756022***
1/2"	1/4"	***31756214***
1/2"	3/8"	***31756218***
1/2"	1/2"	***31756222***

Female Connectors

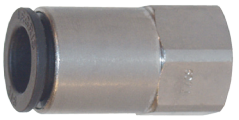

tube to female NPT

Tube OD	Female NPT	*Nickel-plated Brass* Part Number
1/8"	1/8"	***30145311***
1/8"	1/4"	***30145314***
5/32"	1/8"	***30140411***
5/32"	1/4"	***30140414***
1/4"	1/8"	***30145611***
1/4"	1/4"	***30145614***
5/16"	1/8"	***30140811***
5/16"	1/4"	***30140814***
3/8"	1/8"	***30146011***
3/8"	1/4"	***30146014***
3/8"	3/8"	***30146018***

Male Swivel Elbows

tube to male NPT

Tube OD	Male NPT	*Nylon/Nickel-plated Brass* Part Number
1/8"	10-32 *	***31095320***
1/8"	1/16"	***31095308***
1/8"	1/8"	***31095311***
1/8"	1/4"	***31095314***
5/32"	10-32 *	***31090420***
5/32"	1/8"	***31090411***
5/32"	1/4"	***31090414***
1/4"	10-32 *	***31095620***
1/4"	1/8"	***31095611***
1/4"	1/4"	***31095614***
1/4"	3/8"	***31095618***
5/16"	1/8"	***31090811***
5/16"	1/4"	***31090814***
5/16"	3/8"	***31090818***
3/8"	1/8"	***31096011***
3/8"	1/4"	***31096014***
3/8"	3/8"	***31096018***
3/8"	1/2"	***31096022***
1/2"	1/4"	***31096214***
1/2"	3/8"	***31096218***
1/2"	1/2"	***31096222***

* UNF - Straight thread, supplied with gasket

Female Swivel Elbows

tube to female NPT

Tube OD	Female NPT	*Nylon/Nickel-plated Brass* Part Number
1/8"	1/8"	***30095311***
5/32"	1/4"	***30090414***
1/4"	1/8"	***30095611***
1/4"	1/4"	***30095614***
5/16"	1/8"	***30090811***
5/16"	1/4"	***30090814***
3/8"	1/4"	***30096014***
1/2"	3/8"	***30096218***

Nylon/Nickel-Plated Brass Legris Push-In Fittings

45° Male Elbows

***fractional inch* tube to male NPT**

Tube OD	Male NPT	*Nylon/Nickel-plated Brass* Part Number
1/4"	1/8"	***31135611***
1/4"	1/4"	***31135614***
3/8"	1/4"	***31136014***
3/8"	3/8"	***31136018***

90° Male Elbows

***fractional inch* tube to male NPT**

Tube OD	Male NPT	*Nylon/Nickel-plated Brass* Part Number
1/4"	1/8"	***31295611***
1/4"	1/4"	***31295614***
3/8"	1/4"	***31296014***
3/8"	3/8"	***31296018***

Unions

tube to tube

Bulkhead Unions

tube to tube

Union Elbows

tube to tube

Tube OD	*Nylon* Part Number	*Nylon* Part Number	*Nylon* Part Number
1/8"	***31065300***	***31165300***	***31025300***
5/32"	***31060400***	***31160400***	***31020400***
1/4"	***31065600***	***31165600***	***31025600***
5/16"	***31060800***	***31160800***	***31020800***
3/8"	***31066000***	***31166000***	***31026000***
1/2"	***31066200***	***31166200***	***31026200***

Y Male Swivel Connectors

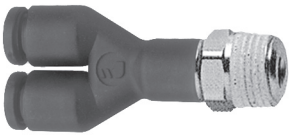

tube to male NPT

Tube OD	Male NPT	*Nylon/Nickel-plated Brass* Part Number
5/32"	1/8"	***31480411***
5/32"	1/4"	***31480414***
1/4"	1/8"	***31485611***
1/4"	1/4"	***31485614***

Y Connectors

tube to tube

Tube OD	*Nylon* Part Number
1/8"	***31405300***
5/32"	***31400400***
1/4"	***31405600***
5/16"	***31400800***
3/8"	***31406000***

Union Tees

tube to tube

Tube OD	*Nylon* Part Number
1/8"	***31045300***
5/32"	***31040400***
1/4"	***31045600***
5/16"	***31040800***
3/8"	***31046000***
1/2"	***31046200***

Plugs

tube

Tube OD	*Plastic* Part Number
1/8"	***31265300***
5/32"	***31260400***
1/4"	***31265600***
5/16"	***31260800***
3/8"	***31266000***
1/2"	***31266200***

Polyethylene Tubing

Features:
- designed for FDA applications
- temperature range: **-50°F** to **140°F** (working pressure given at 70°F)
- designed for use with the push-in fittings sold on pages 148-150
- flexible, lightweight, low-density polyethylene (LDPE) tubing
- for use with plastic or metal inserts with outer sleeve; ferrule or clamps
- formulated to resist stress cracking

Size OD ID	Wall Thickness	Working Pressure @ 75°F	Length	Tubing Color	Part Number
1/4" x .125"	.062	**150**	*100' roll*	natural	***31135611***
1/4" x .170"	.040	**150**	*100' roll*	natural	***31135614***
3/8" x .250"	.062	**150**	*100' roll*	natural	***31136014***
1/2" x .375"	.062	**125**	*100' roll*	natural	***31136018***

Size OD ID	Wall Thickness	Working Pressure @ 75°F	Length	Tubing Color	Part Number
1/4" x .170"	.040	**150**	*100' roll*	blue	***0817BL100***
1/4" x .170"	.040	**150**	*500' roll*	blue	***0817BL***
1/4" x .170"	.040	**150**	*500' roll*	black	***0817BR***
1/4" x .170"	.040	**150**	*500' roll*	natural	***0817CR***
3/8" x .250"	.062	**150**	*500' roll*	black	***1208BR***
3/8" x .250"	.062	**150**	*500' roll*	natural	***1208CR***

High Pressure Quick Disconnect Fittings

Product Specifications

Size Range:
- 1/8" - 1-1/2"

Materials:
- brass
- 303 stainless steel
- 316 stainless steel
- steel

High Pressure Quick Disconnect Fitting Selection

Index

H Series....172-173
ISO-B Series....173
HT Series....174-176
ISO Flush Face Series....174
ST Series....177
V Series....178-179

H- Series Hydraulic Couplings

Interchange Data:

- Interchangeable to ISO7241 Series 'B'
- Parker 60-Series, Snap-Tite 72-Series, Hansen HK-Series, Faster Series 'HNV' Aeroquip/Eaton FD45, Stucchi Series IRB/IRBO/IRBX

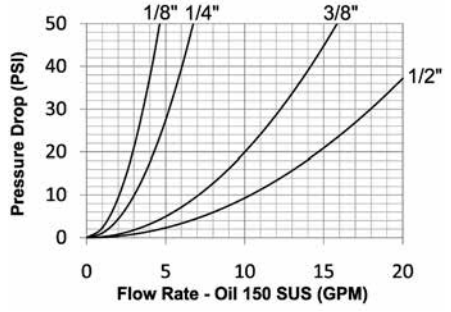

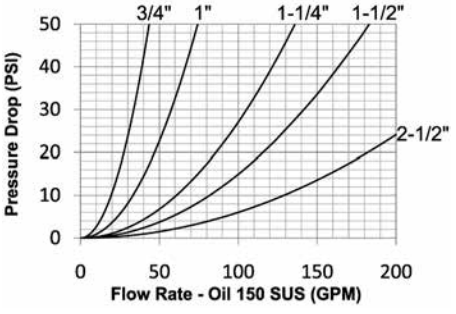

Materials:

- Machined components are manufactured using solid steel, brass, 303 stainless steel or 316 stainless steel bar stock.
- Stainless steel balls, retaining rings, and springs maximize corrosion resistance and extend service life.

Seal Components:

- Nitrile, Viton®, FDA Viton®, PTFE and other materials available.
- 1/8" to 1" steel and stainless couplers have a PTFE anti-extrusion ring.
- 1/8" to 2-1/2" brass couplers have a redundant O-Ring sealing system (dual O-Rings/no PTFE back-up ring)
- 1-1/4" to 2-1/2" steel and stainless couplers have a redundant o-ring sealing system (dual O-Rings/no PTFE back-up ring)
- Valve seals are crimped in place to maintain integrity during excessive flow conditions and pressurized connection.

Rated Pressure Chart
H-Series ISO-B Interchange (Connected)

Body Size	Brass Coupler/Plug				303 Stainless Coupler/Plug				316 Stainless Coupler/Plug			
	Maximum Working		Burst		Maximum Working		Burst		Maximum Working		Burs	
	PSI	Bar	PSI	Bar	PSI	Bar	PSI	Bar	PSI	Bar	PSI	Bar
1/8"	3,000	200	16,500	1,100	3,500	240	29,500	2,000	3,500	240	29,500	2,000
1/4"	3,000	200	15,000	1,000	3,500	240	31,500	2,150	3,500	240	33,000	2,200
3/8"	2,500	175	12,000	800	3,500	240	26,500	1,800	3,500	240	28,000	1,900
1/2"	2,500	175	11,500	750	3,500	240	27,500	1,900	3,500	240	22,000	1,500
3/4"	2,000	138	12,000	800	3,000	200	16,000	1,100	3,000	200	21,500	1,450
1"	1,500	100	8,500	600	2,000	138	15,000	1,000	2,000	138	15,000	1,000
1-1/4"	1,000	70	6,500	450	2,000	138	10,000	700	1,000	70	8,500	580
1-1/2"	1,000	70	6,500	450	1,500	100	8,500	580	1,000	70	7,000	480

ISO-B Series

Couplers

Size	A	B	C	*Brass* Part Number	*303 Stainless Steel* Part Number	*316 Stainless Steel* Part Number
1/8"	48.3 mm	23.6 mm	9/16"	***1HF1-B***	***1HF1-S***	---
1/4"	57.4 mm	28.5 mm	3/4"	***2HF2-B***	***2HF2-S***	***2HF2-SS***
3/8"	63.8 mm	36.1 mm	7/8"	***3HF3-B***	***3HF3-S***	***3HF3-SS***
1/2"	72.6 mm	47.2 mm	1-1/16"	***4HF4-B***	***4HF4-S***	***4HF4-SS***
3/4"	90.2 mm	56.4 mm	1-5/16"	***6HF6-B***	***6HF6-S***	***6HF6-SS***
1"	104.9 mm	63.3 mm	1-5/8"	***8HF8-B***	***8HF8-S***	***8HF8-SS***
1-1/4"	114.3 mm	66.0 mm	2-3/8"	***10HF10-B***	***10HF10-S***	***10HF10-SS***
1-1/2"	122.2 mm	76.2 mm	2-5/8"	***12HF12-B***	***12HF12-S***	***12HF12-SS***

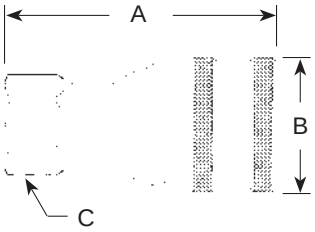

Nipples

Size	A	B	C	*Brass* Part Number	*303 Stainless Steel* Part Number	*316 Stainless Steel* Part Number
1/8"	32.5 mm	16.5 mm	9/16"	***H1F1-B***	***H1F1-S***	---
1/4"	39.4 mm	22.9 mm	3/4"	***H2F2-B***	***H2F2-S***	***H2F2-SS***
3/8"	43.2 mm	24.6 mm	7/8"	***H3F3-B***	***H3F3-S***	***H3F3-SS***
1/2"	49.3 mm	29.7 mm	1-1/16"	***H4F4-B***	***H4F4-S***	***H4F4-SS***
3/4"	61.2 mm	36.6 mm	1-5/16"	***H6F6-B***	***H6F6-S***	***H6F6-SS***
1"	72.9 mm	45.5 mm	1-5/8"	***H8FB-B***	***H8F8-S***	***H8F8-SS***
1-1/4"	108.0 mm	66.0 mm	2-3/8"	***H10F10-B***	***H10F10-S***	***H10F10-SS***
1-1/2"	120.9 mm	73.2 mm	2-5/8"	***H12F12-B***	***H12F12-S***	***H12F12-SS***

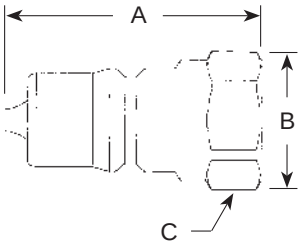

ISO-B Food Grade Series

Couplers

Size	*303 Stainless Steel with nylon boot* Part Number	*303 Stainless Steel with silicone boot* Part Number	*316 Stainless Steel with nylon boot* Part Number	*316 Stainless Steel with silicone boot* Part Number
1/2"	***D-4HF4-S-FNS***	***D-4HF4-S-FSB***	***D-4HF4-SS-FNS***	***D-4HF4-SS-FSB***

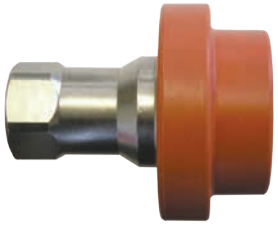

Nipples

Size	*Steel* Part Number	*303 Stainless Steel* Part Number	*316 Stainless Steel* Part Number
1/2"	***D-H4F4-SV-8***	***D-H4F4-S***	***D-H4F4-SS***

HT- Series Hydraulic Couplings

Interchange Data:

- Interchangeable to ISO16028
- Parker FEM-Series, Snap-Tite 74-Series, Hansen FF, Aeroquip/Eaton FD89, Stucchi FIRG/Series 'A', Faster FFN/FFI/2FFN/2FFI, Safeway FF49-Series

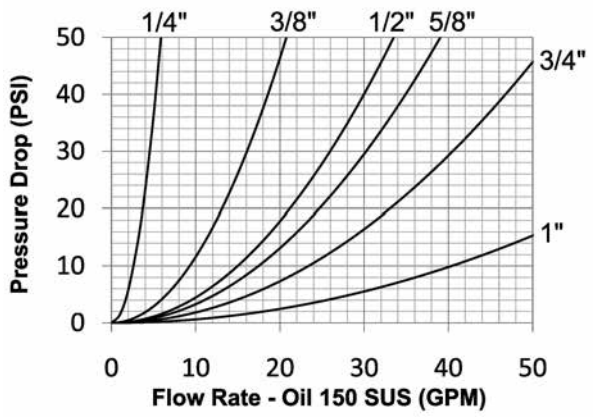

Materials:

- Machined components are manufactured using 316 stainless steel bar stock.
- Stainless steel balls, retaining rings, and springs maximize corrosion resistance and extend service life.

Seal Components:

- ¼" to ¾" nipples have molded Polyurethane valve seals,with a temperature range of -65°F to +212°F (-54°C to +100°C).
- 1" nipples have Nitrile-Energized PTFE valve seals, with a temperature range of -40°F to +250°F (-40°C to +121°C).
- Nitrile and other seals are available.
- Couplers have a polyurethane valve stem O-Ring, with a temperature range of -65°F to +212°F (-54°C to +100°C).
- Ancillary coupler and nipple seals are Nitrile (Buna-N), temperature range of -40°F to +250°F (-40°C to +121°C).
- PTFE Anti-Extrusion ring protects main coupling valve seal from dynamic impulse pressure damage.

Rated Pressure Chart
HT-Series ISO16028 Flushface

Body Size	Steel Coupler/Plug Coupled				316SS Coupler/Plug Coupled				Steel Coupler Uncoupled				Steel Plug Uncoupled			
	Max. Working		Burst		Max. Working		Burst		Max. Working		Burst		Max. Working		Burst	
	PSI	Bar	PSI	Bar	PSI	Bar	PSI	Bar	PSI	Bar	PSI	Bar	PSI	Bar	PSI	Bar
1/4"	4575	316	18,300	1262	-	-	-	-	4575	316	18,300	1262	4575	316	18,300	1262
3/8"	4375	302	17,500	1207	3500	241	17,500	1207	4375	302	17,500	1207	4375	302	17,500	1207
1/2"	4250	293	17,000	1172	3400	234	17,000	1172	4250	293	17,000	1172	4250	293	17,000	1172
5/8"	3650	252	14,600	1007	2920	201	14,600	1007	3650	252	14,600	1007	3650	252	14,600	1007
3/4"	3650	252	14,600	1007	2920	201	14,600	1007	3650	252	14,600	1007	3650	252	14,600	1007
1"	3650	252	14,600	1007	2920	201	14,600	1007	3650	252	14,600	1007	3650	252	14,600	1007

HT- Series Hydraulic Couplings

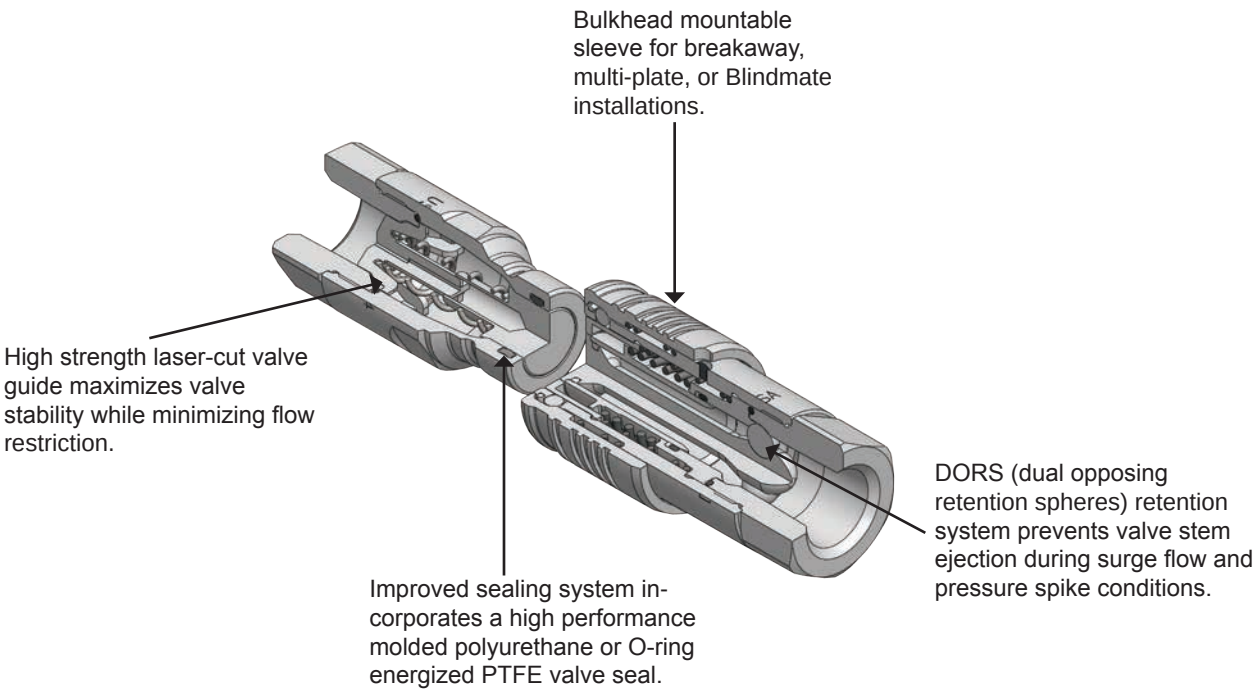

Using the Nipple Profile Dimensions to Select Proper Size

ISO16028 Body Size	Minimum Dimension 'X' Measurement	Maximum Dimension 'X' Measurement
1/4"	0.634" (16.10 mm)	0.638" (16.20 mm)
3/8"	0.774" (19.66 mm)	0.779" (19.79 mm)
1/2"	0.963" (24.45 mm)	0.968" (24.58 mm)
5/8"	1.061" (26.95 mm)	1.066" (27.08 mm)
3/4"	1.176" (29.87 mm)	1.181" (30.00 mm)
1"	1.415" (35.94mm)	1.420" (36.07 mm)

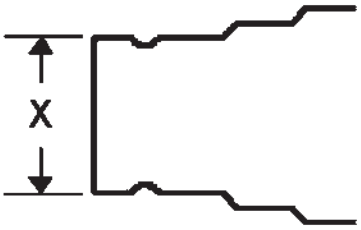

Using the Profile Layover to Select Proper Size

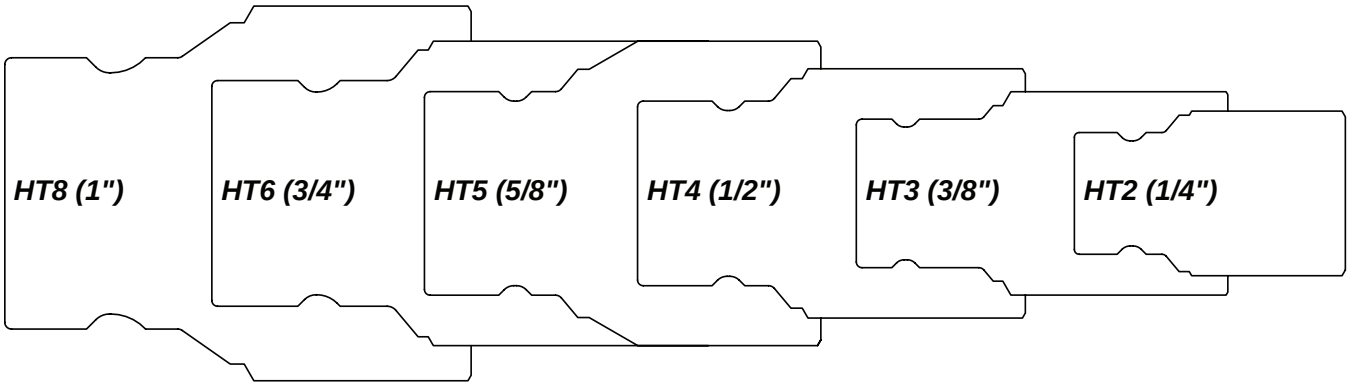

ISO FlushFace Series

Couplers

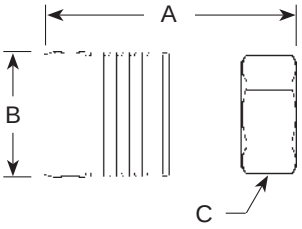

Size	NPTF	A	B	C	*Steel* Part Number	*316 Stainless Steel* Part Number
3/8"	3/8"	63.3 mm	31.2 mm	1-1/16"	***3HTF3***	***3HTF3-SS***
3/8"	1/2"	66.0 mm	31.2 mm	1-1/16"	***3HTF4***	***3HTF4-SS***
1/2"	1/2"	82.0 mm	39.1 mm	1-5/16"	***4HTF4***	***4HTF4-SS***
1/2"	3/4"	86.1 mm	39.1 mm	1-7/16"	***4HTF6***	***4HTF6-SS***
5/8"	3/4"	89.9 mm	42.2 mm	1-1/2"	***5HTF6***	***5HTF6-SS***
3/4"	3/4"	90.9 mm	47.0 mm	1-1/2"	***6HTF6***	***6HTF6-SS***
3/4"	1"	90.9 mm	47.0 mm	1-1/2"	***6HTF8***	***6HTF8-SS***
1"	1"	111.8 mm	58.2 mm	1-5/8"	***8HTF8***	***8HTF8-SS***
1"	1-1/4"	111.8 mm	58.2 mm	1-5/8"	***8HTF10***	***8HTF10-SS***

Nipples

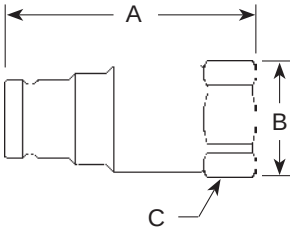

Size	NPTF	A	B	C	*Steel* Part Number	*316 Stainless Steel* Part Number
3/8"	3/8"	62.2 mm	31.2 mm	1-1/16"	***HT3F3***	***HT3F3-SS***
3/8"	1/2"	65.0 mm	31.2 mm	1-1/16"	***HT3F4***	***HT3F4-SS***
1/2"	1/2"	79.0 mm	38.6 mm	1-5/16"	***HT4F4***	***HT4F4-SS***
1/2"	3/4"	82.8 mm	38.6 mm	1-7/16"	***HT4F6***	***HT4F6-SS***
5/8"	3/4"	86.1 mm	42.2 mm	1-1/2"	***HT5F6***	***HT5F6-SS***
3/4"	3/4"	87.6 mm	47.0 mm	1-1/2"	***HT6F6***	***HT6F6-SS***
3/4"	1"	87.6 mm	47.0 mm	1-1/2"	***HT6F8***	***HT6F8-SS***
1"	1"	101.6 mm	58.2 mm	1-5/8"	***HT8F8***	***HT8F8-SS***
1"	1-1/4"	101.6 mm	60.0 mm	1-5/8"	***HT8F10***	***HT8F10-SS***

ST- Series Hydraulic Couplings

Materials:
- Machined components are manufactured using 316 stainless bar stock.
- Stainless steel balls, retaining rings, and springs maximize corrosion resistance and extend service life.

Seal Components:
- Nitrile (Buna-N) seals are standard, providing a temperature range of -40°F to +250°F (-40°C to +121°C).
- All couplers and nipples incorporate PTFE anti-extrusion rings to protect the seal components from dynamic impulse damage.
- Other seal materials are available.

Interchange Data:
- Interchangeable with Snap-Tite 71-Series

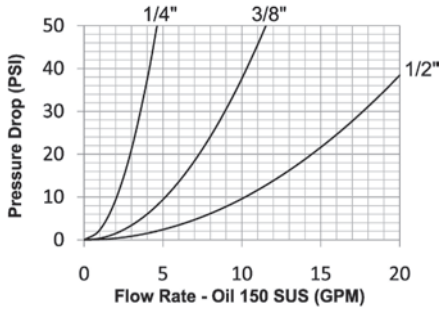

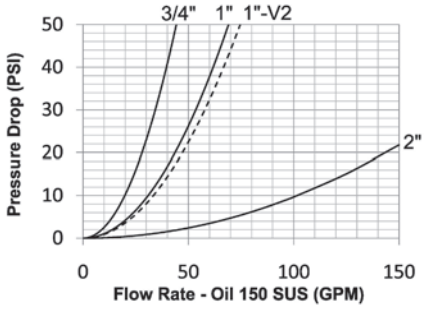

Rated Pressure Chart
ST-Series Snap-Tite 71-Series Interchange

Body Size	316 Stainless Coupler / Plug Coupled			
	Maximum Working		Burst	
	PSI	Bar	PSI	Bar
1/4"	5,000	345	28,000	1,900
3/8"	5,000	345	28,000	1,900
1/2"	5,000	345	25,000	1,700
3/4"	5,000	345	22,800	1,550
1"	4,000	275	18,500	1,250
2"	3,000	200	10,000	700

Snap-Tite '71' Interchange ST Series

Couplers

Size	NPTF	A	B	C	*316 Stainless Steel* Part Number
1/4"	1/4"	49.8 mm	31.2 mm	15/16"	***2STF2-SS***
3/8"	3/8"	59.9 mm	40.6 mm	1-3/16"	***3STF3-SS***
3/8"	1/2"	59.9 mm	40.6 mm	1-3/16"	***3STF4-SS***
1/2"	1/2"	70.4 mm	50.3 mm	1-1/2"	***4STF4-SS***
3/4"	3/4"	77.0 mm	59.7 mm	1-3/4"	***6STF6-SS***
1"	1"	84.6 mm	69.3 mm	2"	***8STF8-SS***
1"	1-1/4"	93.2 mm	69.3 mm	2"	***8STF10-SS***

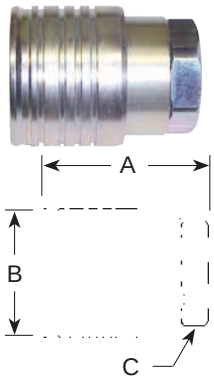

Nipples

Size	NPTF	A	B	C	*316 Stainless Steel* Part Number
1/4"	1/4"	46.7 mm	22.9 mm	13/16"	***ST2F2-SS***
3/8"	3/8"	58.9 mm	37.6 mm	1"	***ST3F3-SS***
3/8"	1/2"	58.9 mm	37.6 mm	1"	***ST3F4-SS***
1/2"	1/2"	60.2 mm	41.9 mm	1-1/2"	***ST4F4-SS***
3/4"	3/4"	75.2 mm	48.8 mm	1-3/4"	***ST6F6-SS***
1"	1"	81.8 mm	53.3 mm	1-7/8"	***ST8F8-SS***
1"	1-1/4"	88.4 mm	55.9 mm	2"	***ST8F10-SS***

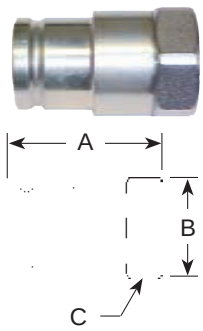

V-Series Hydraulic Couplings

Interchange Data:
- Interchangeable to MIL-C-51234
- Snap-Tite H/IH and Faster TNV/TNL

Materials:
- Machined components are manufactured using or 316 stainless steel bar stock.
- Stainless steel balls, retaining rings, and springs maximize corrosion resistance and extend service life.

Seal Components:
- Nitrile (Buna-N) seals are standard, providing a temperature range of -40°F to +250°F (-40°C to +121°C).
- Other materials are available.
- All couplers incorporate a PTFE anti-extrusion ring to protect the seal components from dynamic impulse damage.
- ¼" to 1" valve seals are crimped in place to maintain integrity during excessive flow conditions and pressurized connection.
- 1¼" to 2" valve O-rings are retained by a unique seal-groove profile and are field replaceable.

Note: Air flow data is presented using a coupler with a 'TV' valve and unvalved nipple. This configuration provides the optimal performance for pneumatic applications.

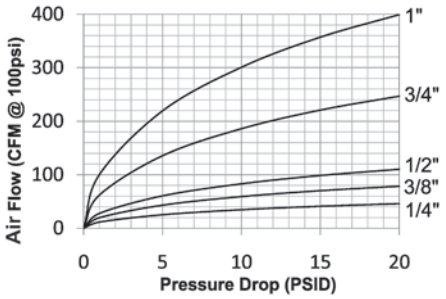

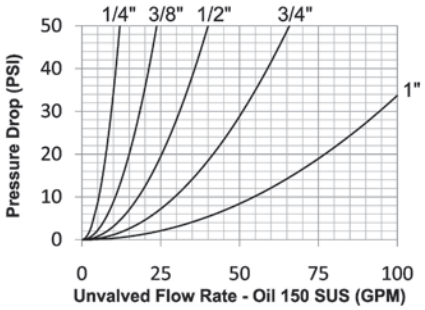

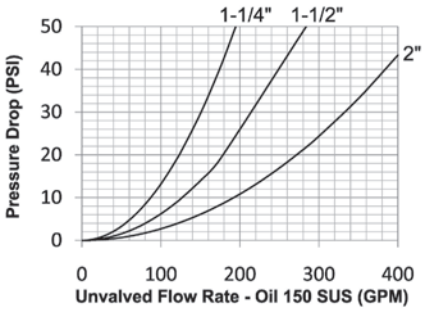

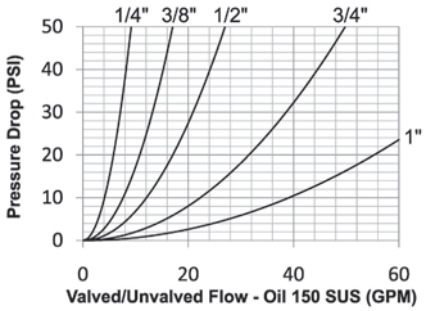

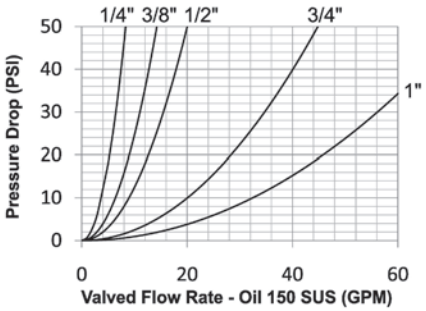

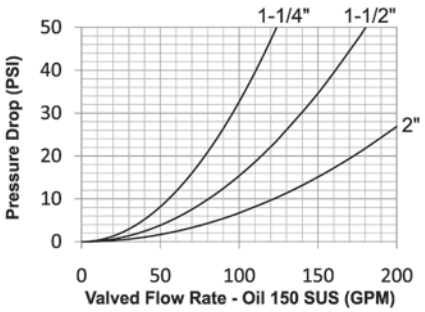

V Series Profiles

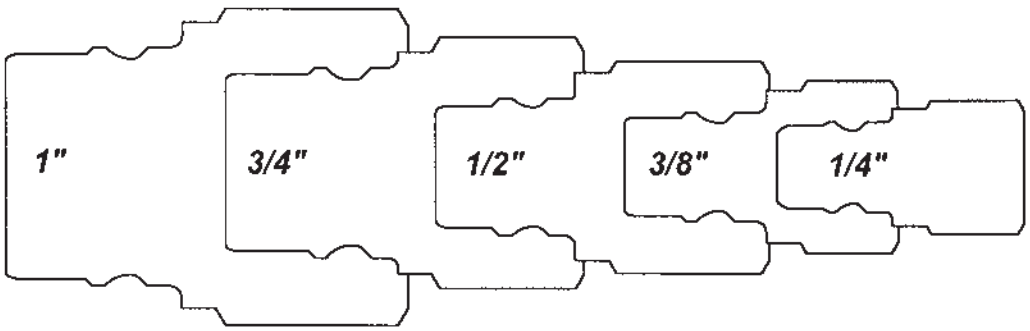

Snap-Tite 'H' interchange V Series

Valved Couplers

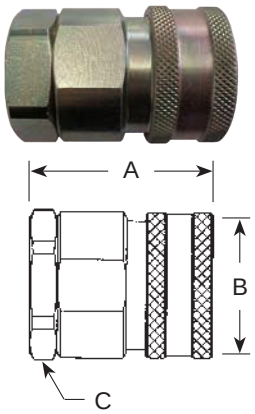

Size	A	B	C	*Brass* Part Number	*316 Stainless Steel* Part Number
1/4"	42.7 mm	25.2 mm	7/8"	***2VF2-B***	***2VF2-SS***
3/8"	49.3 mm	30.0 mm	1"	***3VF3-B***	***3VF3-SS***
1/2"	54.1 mm	34.5 mm	1-3/16"	***4VF4-B***	***4VF4-SS***
3/4"	62.7 mm	42.4 mm	1-1/2"	***6VF6-B***	***6VF6-SS***
1"	68.6 mm	52.3 mm	1-7/8"	***8VF8-B***	***8VF8-SS***
1-1/4"	89.9 mm	55.6 mm	2"	***10VF10-B***	***10VF10-SS***
1-1/2"	83.1 mm	69.6 mm	2-1/2"	***12VF12-B***	***12VF12-SS***
2"	99.6 mm	97.3 mm	3-1/2"	***16VF16-B***	***16VF16-SS***

Valved Nipples

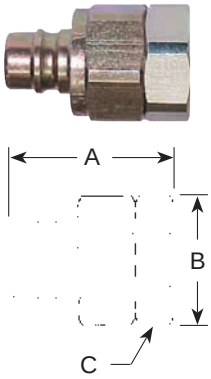

Size	A	B	C	*Brass* Part Number	*316 Stainless Steel* Part Number
1/4"	41.2 mm	24.6 mm	7/8"	***V2F2-B***	***V2F2-SS***
3/8"	47.5 mm	28.0 mm	7/8"	***V3F3-B***	***V3F3-SS***
1/2"	50.6 mm	33.3 mm	1-3/16"	***V4F4-B***	***V4F4-SS***
3/4"	58.7 mm	41.9 mm	1-1/2"	***V6F6-B***	***V6F6-SS***
1"	66.0 mm	52.3 mm	1-7/8"	***V8F8-B***	***V8F8-SS***
1-1/4"	86.6 mm	55.6 mm	2"	***V10F10-B***	***V10F10-SS***
1-1/2"	78.7 mm	69.6 mm	2-1/2"	***V12F12-B***	***V12F12-SS***
2"	94.5 mm	97.3 mm	3-1/2"	***V16F16-B***	***V16F16-SS***

Unvalved Couplers

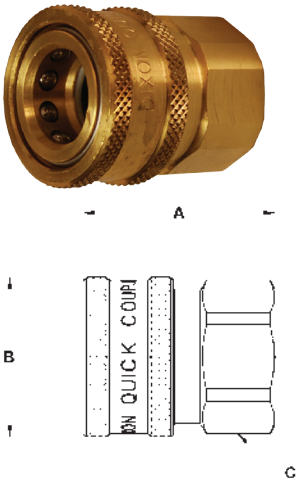

Size	A	B	C	*Brass* Part Number	*316 Stainless Steel* Part Number
1/4"	34.5 mm	25.1 mm	7/8"	***2VF2-B-E***	***2VF2-SS-E***
3/8"	38.1 mm	30.0 mm	7/8"	***3VF3-B-E***	***3VF3-SS-E***
1/2"	41.7 mm	34.8 mm	1-3/16"	***4VF4-B-E***	***4VF4-SS-E***
3/4"	49.8 mm	42.4 mm	1-1/2"	***6VF6-B-E***	***6VF6-SS-E***
1"	53.3 mm	50.5 mm	1-13/16"	***8VF8-B-E***	***8VF8-SS-E***
1-1/4"	57.9 mm	55.6 mm	2"	***10VF10-B-E***	***10VF10-SS-E***
1-1/2"	65.3 mm	69.6 mm	2-1/2"	***12VF12-B-E***	***12VF12-SS-E***
2"	63.0 mm	90.4 mm	3-1/4"	***16VF16-B-E***	***16VF16-SS-E***

Unvalved Nipples

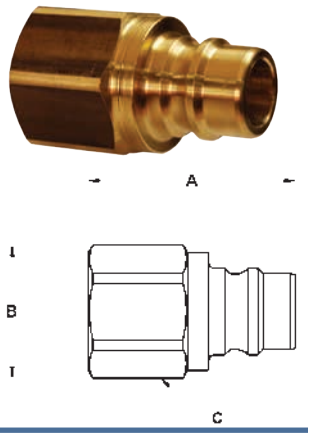

Size	A	B	C	*Brass* Part Number	*316 Stainless Steel* Part Number
1/4"	32.3 mm	17.5 mm	5/8"	***V2F2-B-E***	***V2F2-SS-E***
3/8"	35.8 mm	22.9 mm	13/16"	***V3F3-B-E***	***V3F3-SS-E***
1/2"	43.7 mm	27.9 mm	1"	***V4F4-B-E***	***V4F4-SS-E***
3/4"	47.2 mm	33.3 mm	1-3/16"	***V6F6-B-E***	***V6F6-SS-E***
1"	52.8 mm	41.9 mm	1-1/2"	***V8F8-B-E***	***V8F8-SS-E***
1-1/4"	56.4 mm	52.3 mm	1-7/8"	***V10F10-B-E***	***V10F10-SS-E***
1-1/2"	62.0 mm	59.2 mm	2-1/8"	***V12F12-B-E***	***V12F12-SS-E***
2"	66.0 mm	76.5 mm	2-3/4"	***V16F16-B-E***	***V16F16-SS-E***

Bradford™ Ball Valves

Ball Valve Selection

Product Specifications

Size range:
- ½" - 4" OD tube
- ¼" - 4" nominal pipe

Materials:
- CF8M stainless steel
- brass

Index

Technical Information 181
3-piece Encapsulated Sanitary 182-183
3-way and 4-way Multiport Sanitary 184-187
3-piece Non-Encapsulated Sanitary 188
2-piece Industrial Stainless Steel 189
Full Port Stainless Steel 190
3-piece Industrial Stainless Steel 191
3-way Industrial Stainless Steel 192
2-piece Industrial Brass 193
3-way Industrial Brass 194
Automation 195
Private Label Handle Covers 196

Technical Information

Seal Materials

Code	Designation	Material	Applications
V	Virgin PTFE	Virgin polytetrafluoroethylene	100% PTFE- Our standard seat material. Ideal for most sanitary services. Specified for applications requiring a low co-efficient of friction. **Food Grade Material**
G	RTFE	15% glass reinforced tetrafluoroethylene	15% glass filled + 85% PTFE - Slightly higher temperature and pressure rating than PTFE. Specified for applications requiring higher cycle life than PTFE. **Food Grade Material**
C	25% Carbon PTFE	25% carbon reinforced tetrafluoroethylene	25% carbon +75% PTFE - Specified for higher temperature pressure applications. Ideal for steam and thermal fluid applications. Higher cycle life than RTFE.
S	Stainless Steel PTFE	50% stainless steel filled tetrafluoroethylene	50% stainless steel + 50% PTFE - Specified for higher temperature pressure applications in a sanitary process. **Food Grade Material**
U	UHMW	Ultra-high molecular weight polyethylene	Specified for its low modulus of abrasion and minimal property degradation when exposed to moderate levels of radiation. Ideal for applications where fluorocarbons are not acceptable. **Food Grade Material**

Pressure Temperature Charts

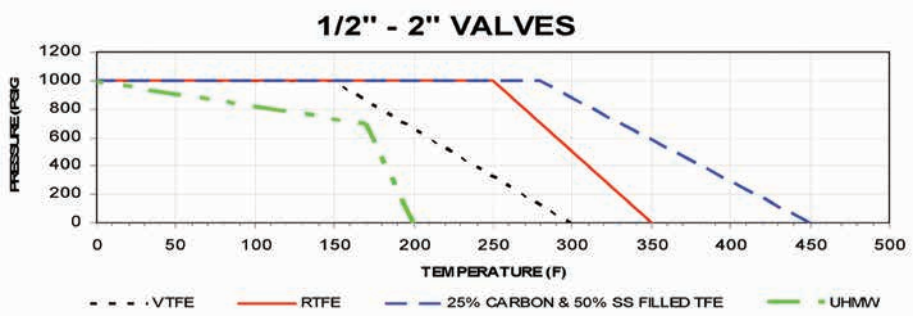

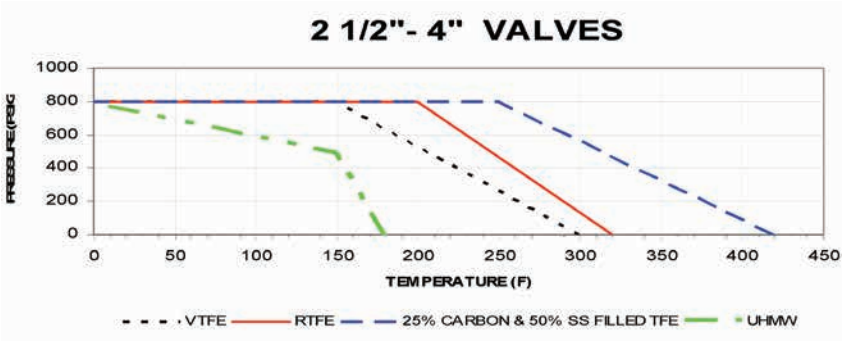

2-Way Encapsulated Sanitary 3 Piece Stainless Steel Ball Valves

Features:

- ½" - 2" rated at **1,000 PSI** WOG; 2½" - 4" rated at **800 PSI** WOG
- balanced encapsulated construction minimizes cold flow
- live-loaded stem packing
- precision stainless steel balls reduce torque and friction losses while extending seat life
- integral ISO 5211 mounting pad
- ID polish is R_a 32 minimum
- lockable handle can prevent accidental actuation
- standard internal entry blow out proof stem design
- full port design matches ball and seat ports to tube ID for lower pressure drop and less turbulent flow
- compact design for areas with tight space restrictions
- fully encapsulated construction produces bubble tight seal
- identification tagging available

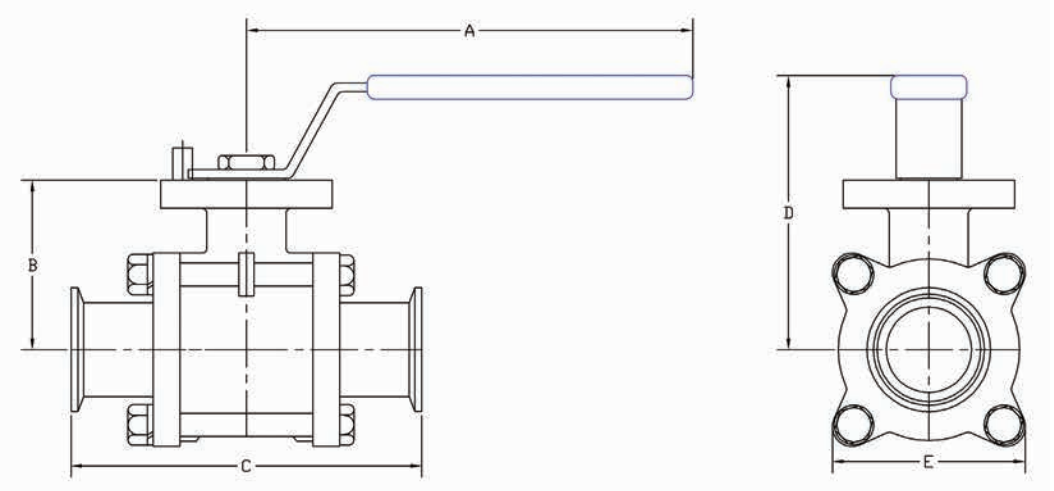

Size	A	B	C	D	E
½"	4.9	1.5	4.3	3.0	1.9
¾"	4.9	1.8	4.7	3.3	2.2
1"	5.6	2.1	4.9	3.6	2.4
1½"	9.5	2.7	5.6	4.4	3.1
2"	9.5	3.1	6.4	4.8	3.7
2½"	18.0	3.8	7.8	5.2	4.8
3"	18.0	4.2	9.0	5.7	5.4
4"	18.0	5.3	9.5	6.8	8.8

Dimensions are approximate. Engineering dimensions are available upon request.
Specifications are subject to change without notice.

Handle Kits

Size	Part Number
½" - ¾"	***BV-23-HA050-075***
1"	***BV-23-HA100***
1½" - 2"	***BV-23-HA150-200***
2½"	***BV-23-HA250***
3" - 4"	***BV-23-HA300-400***

kit contains:
(1) lock washer
(1) handle
(1) nut

- private label handle covers available, see page 196

Repair Kits

kit contains:
(1) O-ring
(1) thrust washer
(3) stem packings
(2) encapsulated seats
(2) body seals

- see page 183 for part numbers

2-Way Encapsulated Sanitary 3 Piece Stainless Steel Ball Valves

Size	Ball Valve Part #	Repair Kit Part #	Break Torque (in-lb)	Code ID	Seat material
½"	***BV2CV-050CC-A***	***BV-2C-VK050***	31	V	Virgin PTFE
¾"	***BV2CV-075CC-A***	***BV-2C-VK075***	47		
1"	***BV2CV-100CC-A***	***BV-2C-VK100***	105		
1½"	***BV2CV-150CC-A***	***BV-2C-VK150***	238		
2"	***BV2CV-200CC-A***	***BV-2C-VK200***	256		
2½"	***BV2CV-250CC-A***	***BV-2C-VK250***	900		
3"	***BV2CV-300CC-A***	***BV-2C-VK300***	1650		
4"	***BV2CV-400CC-A***	***BV-2C-VK400***	2027		
½"	***BV2CG-050CC-A***	***BV-2C-GK050***	34	G	15% glass reinforced RTFE
¾"	***BV2CG-075CC-A***	***BV-2C-GK075***	51		
1"	***BV2CG-100CC-A***	***BV-2C-GK100***	116		
1½"	***BV2CG-150CC-A***	***BV-2C-GK150***	261		
2"	***BV2CG-200CC-A***	***BV-2C-GK200***	281		
2½"	***BV2CG-250CC-A***	***BV-2C-GK250***	990		
3"	***BV2CG-300CC-A***	***BV-2C-GK300***	1815		
4"	***BV2CG-400CC-A***	***BV-2C-GK400***	2229		
½"	***BV2CC-050CC-A***	***BV-2C-CK050***	37	C	25% carbon reinforced PTFE
¾"	***BV2CC-075CC-A***	***BV-2C-CK075***	57		
1"	***BV2CC-100CC-A***	***BV-2C-CK100***	127		
1½"	***BV2CC-150CC-A***	***BV-2C-CK150***	287		
2"	***BV2CC-200CC-A***	***BV-2C-CK200***	309		
2½"	***BV2CC-250CC-A***	***BV-2C-CK250***	1089		
3"	***BV2CC-300CC-A***	***BV-2C-CK300***	1997		
4"	***BV2CC-400CC-A***	***BV-2C-CK400***	2452		
½"	***BV2CS-050CC-A***	***BV-2C-SK050***	41	S	50% stainless steel reinforced PTFE
¾"	***BV2CS-075CC-A***	***BV-2C-SK075***	62		
1"	***BV2CS-100CC-A***	***BV-2C-SK100***	140		
1½"	***BV2CS-150CC-A***	***BV-2C-SK150***	316		
2"	***BV2CS-200CC-A***	***BV-2C-SK200***	340		
2½"	***BV2CS-250CC-A***	***BV-2C-SK250***	1198		
3"	***BV2CS-300CC-A***	***BV-2C-SK300***	2196		
4"	***BV2CS-400CC-A***	***BV-2C-SK400***	2698		
½"	***BV2CU-050CC-A***	***BV-2C-UK050***	31	U	UHMW
¾"	***BV2CU-075CC-A***	***BV-2C-UK075***	47		
1"	***BV2CU-100CC-A***	***BV-2C-UK100***	105		
1½"	***BV2CU-150CC-A***	***BV-2C-UK150***	238		
2"	***BV2CU-200CC-A***	***BV-2C-UK200***	256		
2½"	***BV2CU-250CC-A***	***BV-2C-UK250***	900		
3"	***BV2CU-300CC-A***	***BV-2C-UK300***	1650		
4"	***BV2CU-400CC-A***	***BV-2C-UK400***	2027		

Multi-port Sanitary Stainless Steel Ball Valves

Features:
- full port design on ½" thru 3"
- reduced port design on 4"
- blow-out proof stem
- live-loaded stem packing
- CF8M stainless body, ends and ball
- ISO 5211 mounting pad
- lock-out, tag out
- rated to ½" - 2" **1,000 PSI** WOG
  2½" - 4" **800 PSI** WOG

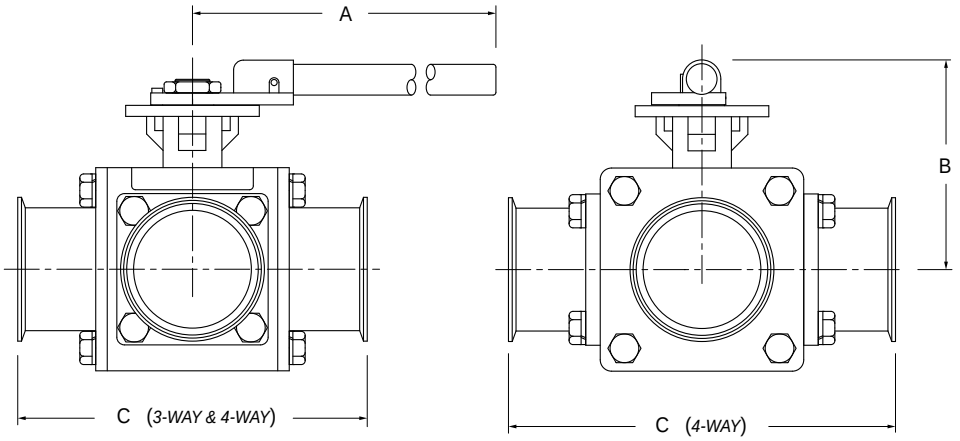

Size	A	B	C	Weight (lbs.)
½"	4.9	3.2	4.6	3.6
¾"	4.9	4.3	5.1	4.3
1"	5.6	3.8	6.0	6.8
1½"	9.5	4.5	6.9	12.6
2"	9.5	5.0	7.5	21.6
2½"	18.0	5.3	8.4	33.7
3"	18.0	6.4	9.6	56.4
4"	18.0	6.8	11.5	85.4

All dimensions are in inches unless otherwise noted. Engineering dimensions are available upon request.
Specifications are subject to change without notice.

Handle Kits

Size	Part Number
½" - ¾"	***BV-23-HA050-075***
1"	***BV-23-HA100***
1½" - 2"	***BV-23-HA150-200***
2½"	***BV-23-HA250***
3" - 4"	***BV-23-HA300-400***

kit contains:
(1) lock washer
(1) handle
(1) nut

- private label handle covers available, see page 196

Repair Kits

kit contains:
(2) encapsulated seat small
(2) encapsulated seat large
(2) body seals
(1) thrust washer
(1) O-ring
(3) stem packings
(1) plug (3-way only)

- see pages 186 and 187 for part numbers

Multi-port Sanitary Stainless Steel Ball Valves

Flow Options

3-way 'L'-port
position A

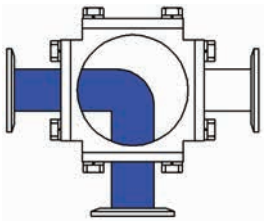

3-way 'L'-port
position B

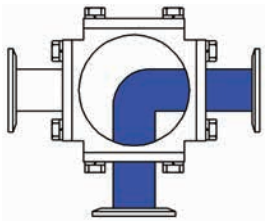

3-way 'L'-port
position C

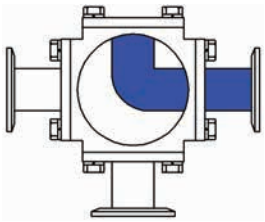

3-way 'T'-port
position A

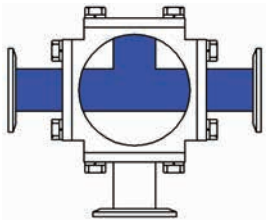

3-way 'T'-port
position B

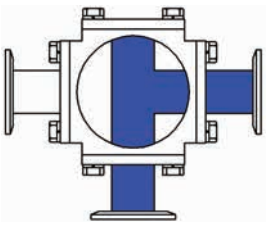

3-way 'T'-port
position C

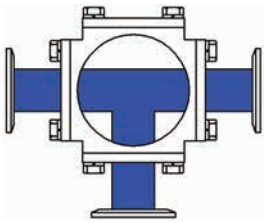

3-way 'T'-port
position D

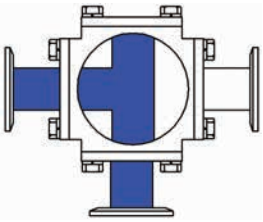

4-way 'L'-port
position A

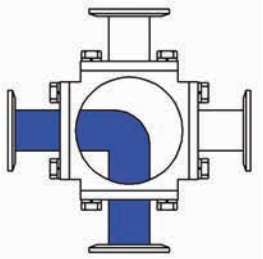

4-way 'L'-port
position B

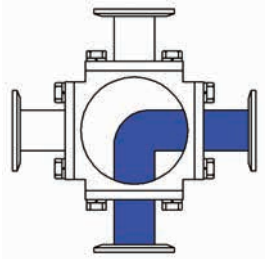

4-way 'L'-port
position C

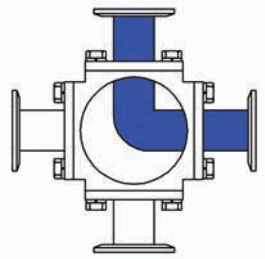

4-way 'L'-port
position D

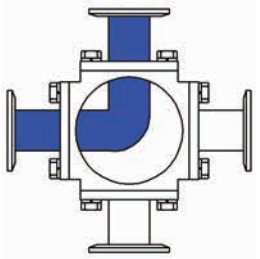

4-way 'T'-port
position A

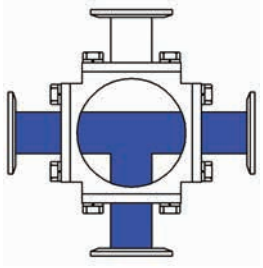

4-way 'T'-port
position B

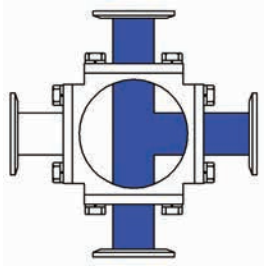

4-way 'T'-port
position C

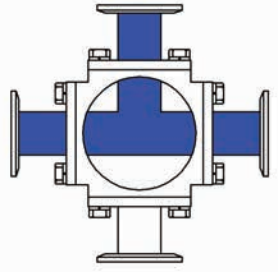

4-way 'T'-port
position D

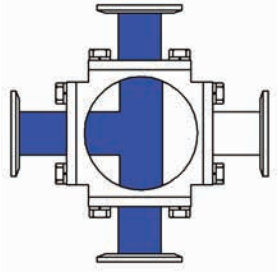

3-way Multi-port Sanitary Stainless Steel Ball Valves

Size	"L" port Ball Valve Part #	"T" port Ball Valve Part #	Repair Kit Part #	"L" Port Break Torque (in-lb)	"T" Port Break Torque (in-lb)	Code ID	Seat material
½"	**BV3SVLF050C-A**	**BV3SVTF050C-A**	**BV-3SVFRK050**	65	44	V	Virgin PTFE
¾"	**BV3SVLF075C-A**	**BV3SVTF075C-A**	**BV-3SVFRK075**	76	76		
1"	**BV3SVLF100C-A**	**BV3SVTF100C-A**	**BV-3SVFRK100**	171	171		
1½"	**BV3SVLF150C-A**	**BV3SVTF150C-A**	**BV-3SVFRK150**	356	297		
2"	**BV3SVLF200C-A**	**BV3SVTF200C-A**	**BV-3SVFRK200**	553	553		
2½"	**BV3SVLF250C-A**	**BV3SVTF250C-A**	**BV-3SVFRK250**	1114	1114		
3"	**BV3SVLF300C-A**	**BV3SVTF300C-A**	**BV-3SVFRK300**	1875	1400		
4"	**BV3SVLR400C-A**	**BV3SVTR400C-A**	**BV-3SVRRK400**	2241	2050		
½"	**BV3SGLF050C-A**	**BV3SGTF050C-A**	**BV-3SGRK050**	71	48	G	15% glass reinforced RTFE
¾"	**BV3SGLF075C-A**	**BV3SGTF075C-A**	**BV-3SGRK075**	83	84		
1"	**BV3SGLF100C-A**	**BV3SGTF100C-A**	**BV-3SGRK100**	188	188		
1½"	**BV3SGLF150C-A**	**BV3SGTF150C-A**	**BV-3SGRK150**	392	327		
2"	**BV3SGLF200C-A**	**BV3SGTF200C-A**	**BV-3SGRK200**	608	608		
2½"	**BV3SGLF250C-A**	**BV3SGTF250C-A**	**BV-3SGRK250**	1226	1225		
3"	**BV3SGLF300C-A**	**BV3SGTF300C-A**	**BV-3SGRK300**	2063	1540		
4"	**BV3SGLR400C-A**	**BV3SGTR400C-A**	**BV-3SGRK400**	2465	2255		
½"	**BV3SCLF050C-A**	**BV3SCTF050C-A**	**BV-3SCRK050**	78	53	C	25% carbon reinforced PTFE
¾"	**BV3SCLF075C-A**	**BV3SCTF075C-A**	**BV-3SCRK075**	91	92		
1"	**BV3SCLF100C-A**	**BV3SCTF100C-A**	**BV-3SCRK100**	207	207		
1½"	**BV3SCLF150C-A**	**BV3SCTF150C-A**	**BV-3SCRK150**	431	359		
2"	**BV3SCLF200C-A**	**BV3SCTF200C-A**	**BV-3SCRK200**	669	669		
2½"	**BV3SCLF250C-A**	**BV3SCTF250C-A**	**BV-3SCRK250**	1348	1348		
3"	**BV3SCLF300C-A**	**BV3SCTF300C-A**	**BV-3SCRK300**	2269	1694		
4"	**BV3SCLR400C-A**	**BV3SCTR400C-A**	**BV-3SCRK400**	2712	2481		
½"	**BV3SSLF050C-A**	**BV3SSTF050C-A**	**BV-3SSRK050**	86	59	S	50% stainless steel reinforced PTFE
¾"	**BV3SSLF075C-A**	**BV3SSTF075C-A**	**BV-3SSRK075**	101	101		
1"	**BV3SSLF100C-A**	**BV3SSTF100C-A**	**BV-3SSRK100**	228	228		
1½"	**BV3SSLF150C-A**	**BV3SSTF150C-A**	**BV-3SSRK150**	474	395		
2"	**BV3SSLF200C-A**	**BV3SSTF200C-A**	**BV-3SSRK200**	736	736		
2½"	**BV3SSLF250C-A**	**BV3SSTF250C-A**	**BV-3SSRK250**	1483	1483		
3"	**BV3SSLF300C-A**	**BV3SSTF300C-A**	**BV-3SSRK300**	2496	1863		
4"	**BV3SSLR400C-A**	**BV3SSTR400C-A**	**BV-3SSRK400**	2983	2729		
½"	**BV3SULF050C-A**	**BV3SUTF050C-A**	**BV-3SURK050**	65	44	U	UHMW
¾"	**BV3SULF075C-A**	**BV3SUTF075C-A**	**BV-3SURK075**	76	76		
1"	**BV3SULF100C-A**	**BV3SUTF100C-A**	**BV-3SURK100**	171	171		
1½"	**BV3SULF150C-A**	**BV3SUTF150C-A**	**BV-3SURK150**	356	297		
2"	**BV3SULF200C-A**	**BV3SUTF200C-A**	**BV-3SURK200**	553	553		
2½"	**BV3SULF250C-A**	**BV3SUTF250C-A**	**BV-3SURK250**	1114	1114		
3"	**BV3SULF300C-A**	**BV3SUTF300C-A**	**BV-3SURK300**	1875	1400		
4"	**BV3SULR400C-A**	**BV3SUTR400C-A**	**BV-3SURK400**	2241	2050		

4-way Multi-port Sanitary Stainless Steel Ball Valves

Size	"L" port Ball Valve Part #	"T" port Ball Valve Part #	Repair Kit Part #	"L" Port Break Torque (in-lb)	"T" Port Break Torque (in-lb)	Code ID	Seat material
½"	**BV4SVLF050C-A**	**BV4SVTF050C-A**	**BV-3SVFRK050**	65	44	V	Virgin PTFE
¾"	**BV4SVLF075C-A**	**BV4SVTF075C-A**	**BV-3SVFRK075**	76	76		
1"	**BV4SVLF100C-A**	**BV4SVTF100C-A**	**BV-3SVFRK100**	171	171		
1½"	**BV4SVLF150C-A**	**BV4SVTF150C-A**	**BV-3SVFRK150**	356	297		
2"	**BV4SVLF200C-A**	**BV4SVTF200C-A**	**BV-3SVFRK200**	553	553		
2½"	**BV4SVLF250C-A**	**BV4SVTF250C-A**	**BV-3SVFRK250**	1114	1114		
3"	**BV4SVLF300C-A**	**BV4SVTF300C-A**	**BV-3SVFRK300**	1875	1400		
4"	**BV4SVLR400C-A**	**BV4SVTR400C-A**	**BV-3SVRRK400**	2241	2050		
½"	**BV4SGLF050C-A**	**BV4SGTF050C-A**	**BV-3SGRK050**	71	48	G	15% glass reinforced RTFE
¾"	**BV4SGLF075C-A**	**BV4SGTF075C-A**	**BV-3SGRK075**	83	84		
1"	**BV4SGLF100C-A**	**BV4SGTF100C-A**	**BV-3SGRK100**	188	188		
1½"	**BV4SGLF150C-A**	**BV4SGTF150C-A**	**BV-3SGRK150**	392	327		
2"	**BV4SGLF200C-A**	**BV4SGTF200C-A**	**BV-3SGRK200**	608	608		
2½"	**BV4SGLF250C-A**	**BV4SGTF250C-A**	**BV-3SGRK250**	1226	1225		
3"	**BV4SGLF300C-A**	**BV4SGTF300C-A**	**BV-3SGRK300**	2063	1540		
4"	**BV4SGLR400C-A**	**BV4SGTR400C-A**	**BV-3SGRK400**	2465	2255		
½"	**BV4SCLF050C-A**	**BV4SCTF050C-A**	**BV-3SCRK050**	78	53	C	25% carbon reinforced PTFE
¾"	**BV4SCLF075C-A**	**BV4SCTF075C-A**	**BV-3SCRK075**	91	92		
1"	**BV4SCLF100C-A**	**BV4SCTF100C-A**	**BV-3SCRK100**	207	207		
1½"	**BV4SCLF150C-A**	**BV4SCTF150C-A**	**BV-3SCRK150**	431	359		
2"	**BV4SCLF200C-A**	**BV4SCTF200C-A**	**BV-3SCRK200**	669	669		
2½"	**BV4SCLF250C-A**	**BV4SCTF250C-A**	**BV-3SCRK250**	1348	1348		
3"	**BV4SCLF300C-A**	**BV4SCTF300C-A**	**BV-3SCRK300**	2269	1694		
4"	**BV4SCLR400C-A**	**BV4SCTR400C-A**	**BV-3SCRK400**	2712	2481		
½"	**BV4SSLF050C-A**	**BV4SSTF050C-A**	**BV-3SSRK050**	86	59	S	50% stainless steel reinforced PTFE
¾"	**BV4SSLF075C-A**	**BV4SSTF075C-A**	**BV-3SSRK075**	101	101		
1"	**BV4SSLF100C-A**	**BV4SSTF100C-A**	**BV-3SSRK100**	228	228		
1½"	**BV4SSLF150C-A**	**BV4SSTF150C-A**	**BV-3SSRK150**	474	395		
2"	**BV4SSLF200C-A**	**BV4SSTF200C-A**	**BV-3SSRK200**	736	736		
2½"	**BV4SSLF250C-A**	**BV4SSTF250C-A**	**BV-3SSRK250**	1483	1483		
3"	**BV4SSLF300C-A**	**BV4SSTF300C-A**	**BV-3SSRK300**	2496	1863		
4"	**BV4SSLR400C-A**	**BV4SSTR400C-A**	**BV-3SSRK400**	2983	2729		
½"	**BV4SULF050C-A**	**BV4SUTF050C-A**	**BV-3SURK050**	65	44	U	UHMW
¾"	**BV4SULF075C-A**	**BV4SUTF075C-A**	**BV-3SURK075**	76	76		
1"	**BV4SULF100C-A**	**BV4SUTF100C-A**	**BV-3SURK100**	171	171		
1½"	**BV4SULF150C-A**	**BV4SUTF150C-A**	**BV-3SURK150**	356	297		
2"	**BV4SULF200C-A**	**BV4SUTF200C-A**	**BV-3SURK200**	553	553		
2½"	**BV4SULF250C-A**	**BV4SUTF250C-A**	**BV-3SURK250**	1114	1114		
3"	**BV4SULF300C-A**	**BV4SUTF300C-A**	**BV-3SURK300**	1875	1400		
4"	**BV4SULR400C-A**	**BV4SUTR400C-A**	**BV-3SURK400**	2241	2050		

Non-Encapsulated 2-way 3 Piece Stainless Steel Ball Valves

Features:

- blow-out proof stem
- live-loaded stem packing
- 15% glass reinforced PTFE seats
- CF8M stainless body, ends and ball
- ID polish is R_a 32
- lockable handle
- rated to ½" - 2" **1,000 PSI** WOG
  2½" - 4" **800 PSI** WOG

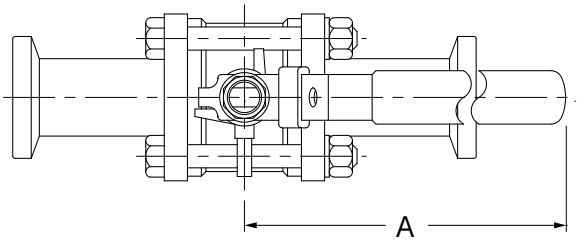

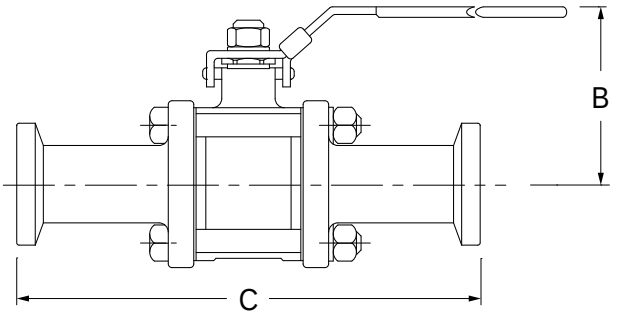

Size	A	B	C	Break Torque (in-lbs.)	Weight (lbs.)	*316 Stainless Steel* Part Number
½"	4.1	2.3	4.6	55	1.4	***BV2GG-050CC-A***
¾"	4.1	2.5	4.7	71	1.8	***BV2GG-075CC-A***
1"	5.0	2.8	4.9	101	2.6	***BV2GG-100CC-A***
1½"	6.1	3.5	5.6	221	4.6	***BV2GG-150CC-A***
2"	7.6	3.9	6.4	345	8.5	***BV2GG-200CC-A***
2½"	7.6	4.4	7.8	883	17.8	***BV2GG-250CC-A***
3"	10.9	4.9	9.0	830	28.2	***BV2GG-300CC-A***
4"	13.2	6.6	9.6	1323	41.4	***BV2GG-400CC-A***

All dimensions are in inches unless otherwise noted. Engineering dimensions are available upon request.
Specifications are subject to change without notice.

Repair Kits

Size	Part Number
½"	***BV-2G-GK050***
¾"	***BV-2G-GK075***
1"	***BV-2G-GK100***
1½"	***BV-2G-GK150***
2"	***BV-2G-GK200***
2½"	***BV-2G-GK250***
3"	***BV-2G-GK300***
4"	***BV-2G-GK400***

Repair Kit contains:
(2) RTFE seats
(2) RTFE gaskets
(1) RTFE thrust washer
(3) RTFE stem packing

- private label handle covers available, see page 196

2 Piece Industrial Stainless Steel Ball Valves

Features:
- full port stainless steel ball valves with FNPT ends
- blow-out proof stem
- ISO 5211 mounting pad
- CF8M stainless body, ends and ball
- RTFE seats and PTFE seals
- private label handle covers available, see page 196
- maximum pressure: ½" - 2" **1,000 PSI** WOG
  2½" - 3" **800 PSI** WOG
- maximum temperature: **350°F**

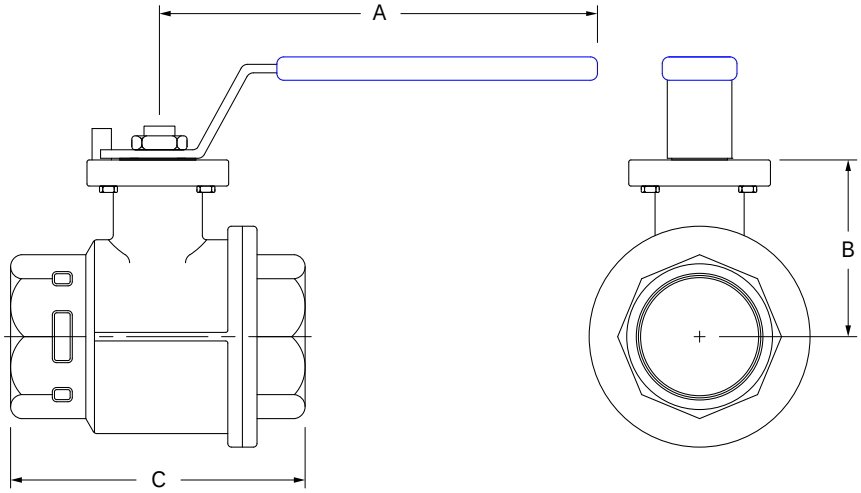

Size	A	B	C	Break Torque (in-lbs.)	Weight (lbs.)	*Stainless Steel* Part Number
1/4"	n/a	1.06	2.17	65	0.53	***BV2HG-02511-A***
3/8"	n/a	1.06	2.17	86	0.53	***BV2HG-03811-A***
1/2"	n/a	1.18	2.41	86	0.66	***BV2HG-05011-A***
3/4"	n/a	1.29	2.99	97	1.12	***BV2HG-07511-A***
1"	n/a	1.72	3.43	160	1.87	***BV2HG-10011-A***
1-1/4"	5.35	1.86	3.93	239	2.76	***BV2HG-12511-A***
1-1/2"	9.17	2.34	4.48	398	4.45	***BV2HG-15011-A***
2"	9.17	2.74	5.21	600	6.3	***BV2HG-20011-A***
2-1/2"	17.32	3.29	6.33	980	11.62	***BV2HG-25011-A***
3"	17.32	4.67	7.34	1000	24.69	***BV2HG-30011-A***

All dimensions are in inches unless otherwise noted. Engineering dimensions are available upon request.
Specifications are subject to change without notice.

Full Port Stainless Steel Ball Valves

Features:

- for use in water, oil and gas
- ¼" - 2" rated to **1000 PSI** WOG (CWP); 2½" - 3" rated to **800 PSI** WOG (CWP); **100 PSI** saturated steam
- 316 stainless steel body, ball and stem
- PTFE seat, joint gasket and thrust washer
- private label handle covers available, see page 196
- blow-out proof stem design
- full port
- temperature range **-20°F** to **450°F**

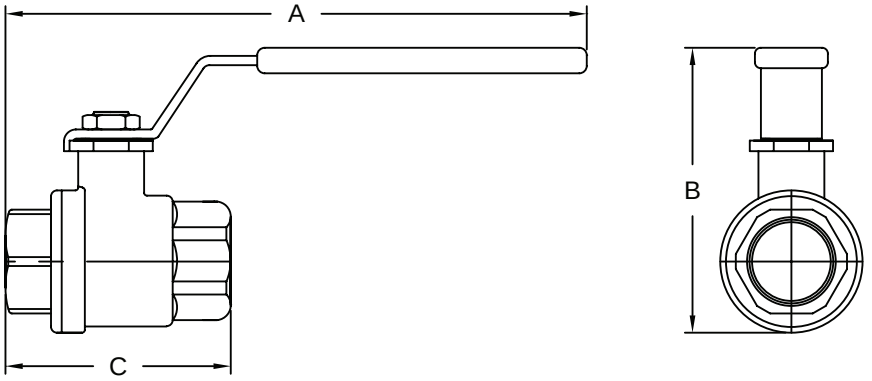

Size	A	B	C	*316 Stainless Steel* Part Number
1/4"	5.25	2.75	1.25	***SSBV25***
3/8"	5.25	3.00	2.25	***SSBV38***
1/2"	6.50	3.25	2.75	***SSBV50***
3/4"	6.75	3.50	3.00	***SSBV75***
1"	8.25	4.00	3.50	***SSBV100***
1-1/4"	8.75	4.50	4.00	***SSBV125***
1-1/2"	9.75	5.00	4.50	***SSBV150***
2"	10.00	5.75	5.00	***SSBV200***
2-1/2"	13.50	7.75	6.50	***SSBV250***
3"	14.00	8.50	7.00	***SSBV300***

All dimensions are in inches unless otherwise noted. Engineering dimensions are available upon request.
Specifications are subject to change without notice.

3 Piece Industrial Stainless Steel Ball Valves

Features:

- full port stainless steel ball valves with FNPT ends or socket weld
- blow out proof stem
- live-loaded stem packing
- 316 stainless steel stem
- swing out design for easy maintenance
- ISO 5211 mounting pad
- CF8M stainless steel body and ball
- private label handle covers available, page 196
- maximum pressure: ½" - 2" **1,000 PSI** WOG at 65°F
  2½" - 3" **800 PSI** WOG at 65°F
  4" **600 PSI** WOG at 65°F
- maximum temperature: **400°F**

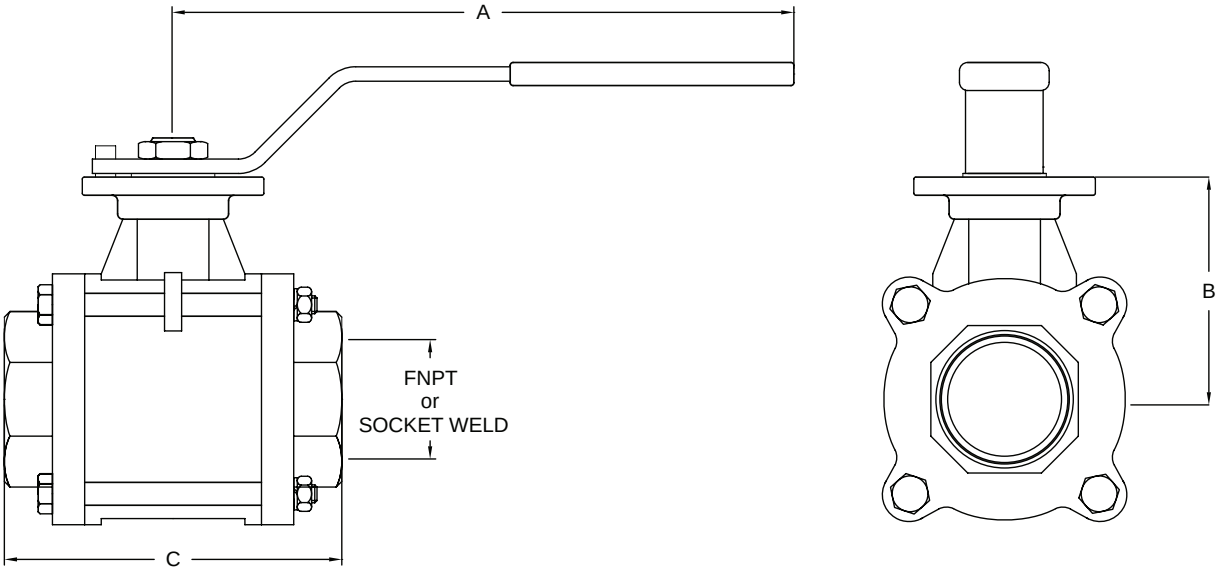

Size	A	B	C	FNPT	Socket Weld	FNPT Part Number	Socket Weld Part Number
1/4"	4.72	1.52	2.51	0.25	n/a	***BV2I*-02511-A***	***BV2I*-02533-A***
3/8"	4.72	1.52	2.51	0.38	0.71	***BV2I*-03811-A***	***BV2I*-03833-A***
1/2"	4.72	1.67	2.84	0.50	0.88	***BV2I*-05011-A***	***BV2I*-05033-A***
3/4"	4.72	1.91	3.11	0.75	1.09	***BV2I*-07511-A***	***BV2I*-07533-A***
1"	5.35	2.17	3.29	1.00	1.35	***BV2I*-10011-A***	***BV2I*-10033-A***
1-1/4"	5.35	2.35	4.14	1.25	1.70	***BV2I*-12511-A***	***BV2I*-12533-A***
1-1/2"	9.17	2.77	4.41	1.50	1.94	***BV2I*-15011-A***	***BV2I*-15033-A***
2"	9.17	3.38	5.13	2.00	2.44	***BV2I*-20011-A***	***BV2I*-20033-A***
2-1/2"	17.32	4.29	6.64	2.50	3.01	***BV2I*-25011-A***	***BV2I*-25033-A***
3"	17.32	4.67	7.34	3.00	3.52	***BV2I*-30011-A***	***BV2I*-30033-A***
4"	17.32	4.54	8.88	4.00	4.52	***BV2I*-40011-A***	***BV2I*-40033-A***

* Use G or C; G = RTFE, C = 25% Carbon PTFE

All dimensions are in inches unless otherwise noted. Engineering dimensions are available upon request.
Specifications are subject to change without notice.

3-way Industrial Stainless Steel Ball Valves

Features:
- full port stainless steel ball valves with FNPT ends
- blow-out proof stem
- ISO 5211 mounting pad
- CF8M stainless steel body and ball
- RTFE seats and seals
- live-loaded stem packing
- for flow options see page 185
- private label handle covers available, page 196
- maximum pressure: ¼" - 1" **1,000 PSI** WOG
  1¼" - 2" **800 PSI** WOG
- maximum temperature: **350°F**

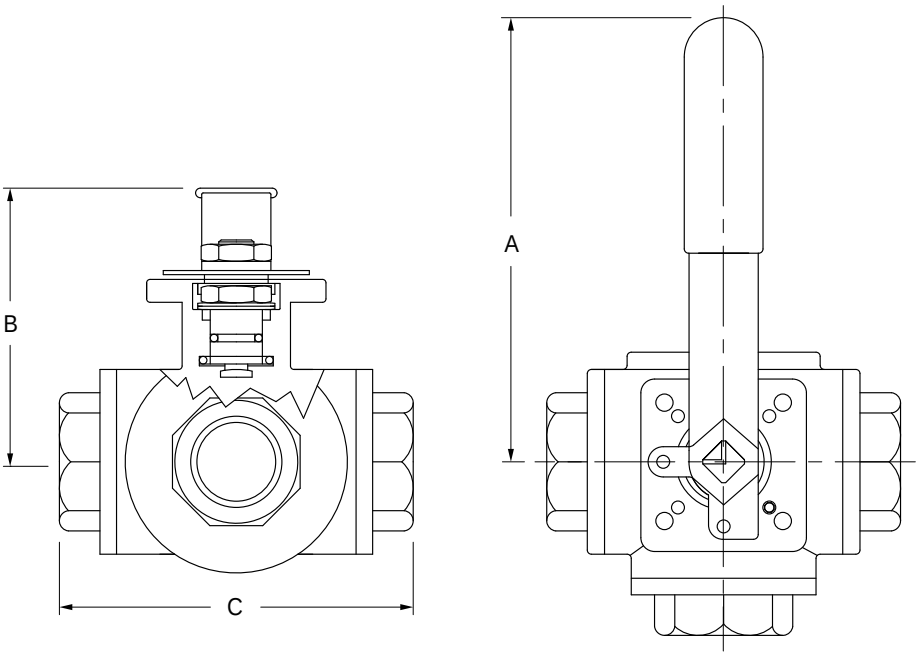

Size	A	B	C	Break Torque (in-lbs.)	Weight (lbs.)	*Stainless Steel* 'L' port Part Number	*Stainless Steel* 'T' port Part Number
1/4"	5.1	2.4	2.8	157	0.70	***BV3IGLF-0251-A***	***BV3IGTF-0251-A***
3/8"	5.1	2.4	2.8	157	0.72	***BV3IGLF-0381-A***	***BV3IGTF-0381-A***
1/2"	5.1	2.5	3.3	207	0.72	***BV3IGLF-0501-A***	***BV3IGTF-0501-A***
3/4"	6.5	3.2	3.9	276	1.11	***BV3IGLF-0751-A***	***BV3IGTF-0751-A***
1"	6.5	3.5	4.4	484	1.71	***BV3IGLF-1001-A***	***BV3IGTF-1001-A***
1-1/4"	8.1	3.9	4.9	692	2.77	***BV3IGLF-1251-A***	***BV3IGTF-1251-A***
1-1/2"	8.1	4.3	5.9	950	3.82	***BV3IGLF-1501-A***	***BV3IGTF-1501-A***
2"	12.8	5.5	6.9	1555	6.73	***BV3IGLF-2001-A***	***BV3IGTF-2001-A***

All dimensions are in inches unless otherwise noted. Engineering dimensions are available upon request.
Specifications are subject to change without notice.

2 Piece Industrial Brass Ball Valves

Features:
- full port brass ball valves with FNPT ends
- blow-out proof stem
- ISO 5211 mounting pad
- PTFE seats
- private label handle covers available, see page 196
- maximum pressure: **600 PSI** WOG
- maximum temperature: **320°F**

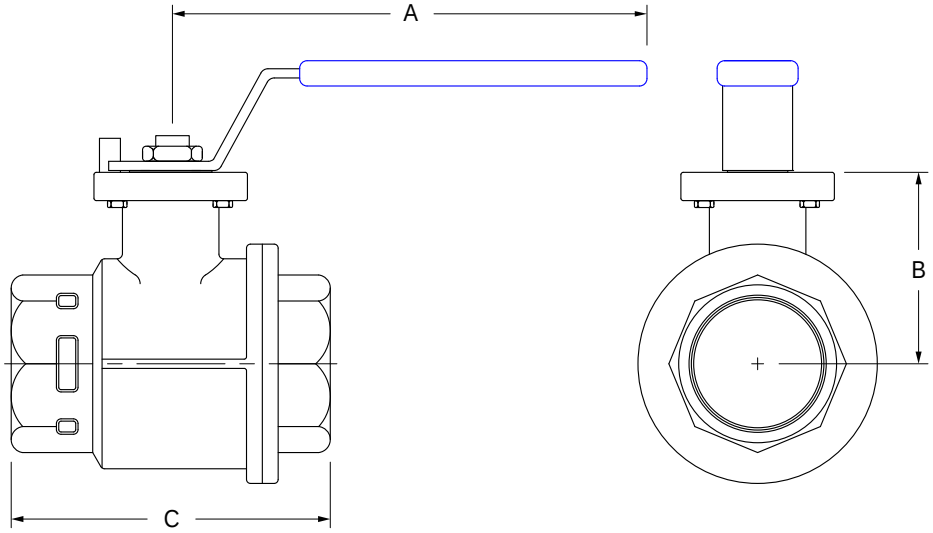

Size	A	B	C	Break Torque (in-lbs.)	Weight (lbs.)	*Brass* Part Number
½"	4.40	1.51	2.16	86	0.86	***BV2BV-05011-A***
¾"	4.40	1.63	2.80	149	0.91	***BV2BV-07511-A***
1"	5.40	1.76	3.23	193	1.55	***BV2BV-10011-A***
1¼"	7.30	2.13	3.58	290	2.14	***BV2BV-12511-A***
1½"	7.80	2.32	4.06	470	3.71	***BV2BV-15011-A***
2"	7.80	2.65	4.76	634	5.52	***BV2BV-20011-A***
2½"	10.40	3.84	6.22	699	8.83	***BV2BV-25011-A***
3"	10.40	4.17	7.40	722	13.29	***BV2BV-30011-A***
4"	12.80	4.76	8.74	1472	18.32	***BV2BV-40011-A***

All dimensions are in inches unless otherwise noted. Engineering dimensions are available upon request.
Specifications are subject to change without notice.

3-way Industrial Brass Ball Valves

Features:

- reduced port brass ball valves with FNPT ends
- blow-out proof stem
- ISO 5211 mounting pad
- PTFE seats with O-ring backing
- double O-ring stem packing
- for flow options see page 166
- private label handle covers available, see page 196
- maximum pressure: **400 PSI** WOG
- maximum temperature: **300°F**

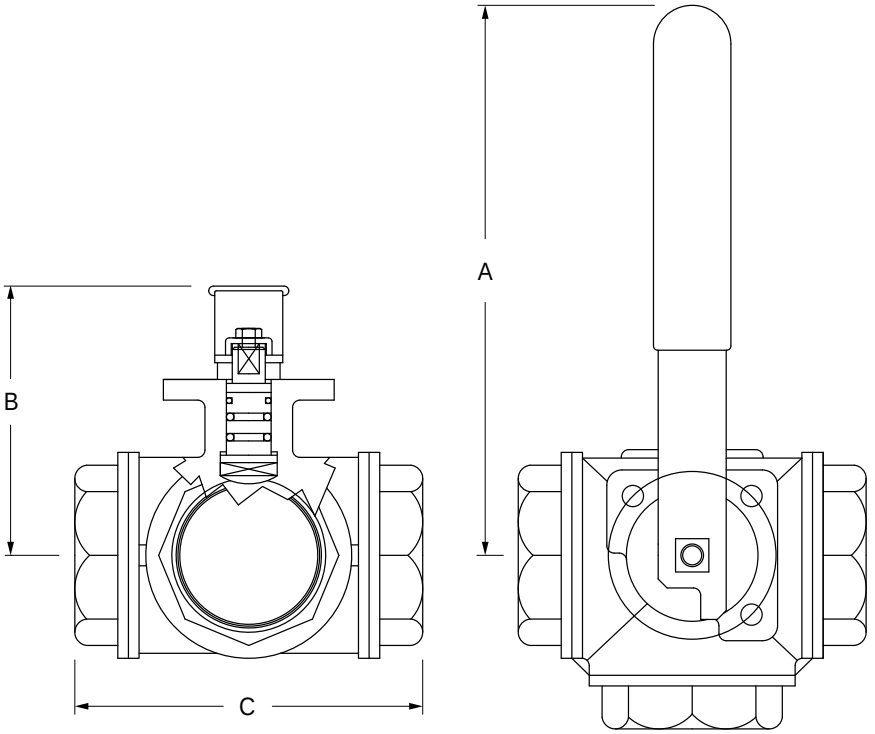

Size	A	B	C	Break Torque (in-lbs.)	Weight (lbs.)	*Brass* 'L' port Part Number	*Brass* 'T' port Part Number
1/4"	4.8	2.4	2.6	79	1.22	***BV3BVLR-0251-A***	***BV3BVTR-0251-A***
3/8"	4.8	2.4	2.6	79	1.16	***BV3BVLR-0381-A***	***BV3BVTR-0381-A***
1/2"	4.8	2.4	2.9	79	1.21	***BV3BVLR-0501-A***	***BV3BVTR-0501-A***
3/4"	4.8	2.5	3.2	79	1.44	***BV3BVLR-0751-A***	***BV3BVTR-0751-A***
1"	6.7	3.0	3.7	225	2.64	***BV3BVLR-1001-A***	***BV3BVTR-1001-A***
1-1/4"	6.7	3.2	4.4	225	4.15	***BV3BVLR-1251-A***	***BV3BVTR-1251-A***
1-1/2"	6.7	3.7	4.9	225	6.02	***BV3BVLR-1501-A***	***BV3BVTR-1501-A***
2"	9.1	4.4	5.7	412	9.08	***BV3BVLR-2001-A***	***BV3BVTR-2001-A***
2-1/2"	9.1	4.9	6.9	570	16.33	***BV3BVLR-2501-A***	***BV3BVTR-2501-A***
3"	9.1	4.9	7.1	570	19.55	***BV3BVLR-3001-A***	***BV3BVTR-3001-A***

All dimensions are in inches unless otherwise noted. Engineering dimensions are available upon request.
Specifications are subject to change without notice.

Ball Valve Automation Examples

Features:
- 2-way ball valve
- stainless steel, encapsulated, full port, PTFE
- clamp x clamp, manual handle
- NEMA 4 SPDT limit switch with 2 mechanical switches

Features:
- 2-way ball valve
- stainless steel, encapsulated, full port, PTFE
- clamp x clamp, rack and pinion, aluminum actuator, spring return, normally closed
- NEMA 4 SPDT limit switch with 2 mechanical switches

Features:
- 2-way ball valve
- stainless steel, encapsulated, full port, PTFE
- butt-weld x butt-weld, rack and pinion, aluminum actuator, spring return, normally closed
- NEMA 7 120VAC Namur mount solenoid, NEMA 7 SPDT limit switch with 2 mechanical switches

Features:
- 3-way ball valve
- T pattern, brass industrial, FNPT, PTFE, reduced port
- NEMA 4/4x 120VAC electric actuator

Features:
- 3-way ball valve
- L pattern, stainless steel, full port, PTFE
- clamp ends, rack and pinion, aluminum actuator, double acting
- NEMA 4 24VDC Namur mount solenoid, NEMA 4 SPDT limit switch with 2 mechanical switches

Private Label Vinyl Handle Covers

Product Specifications

Size	Length	Width	Thickness
small	3.503	0.866	0.067
medium	4.409	1.102	0.071
large	9.251	1.535	0.084

Ordering Information

- 100 pieces per size minimum order
- customer to supply artwork for screen printing

BHC-SR-W

Bradford Handle Cover
Size
Cover Color
Screenprint Color

Size
S .....small
M.....medium
L .....large

Cover Color
R.....red
Y.....yellow
B.....blue
G.....green
BK.....black

Screenprint Color
W.....white
BK.....black
N.....none

Bradford™ Butterfly Valves

Product Specifications

Size range:
- ½" - 8" OD tube

Sanitary Valve Materials:
- 316 stainless steel
- 304 stainless steel

Seat Materials:
- Silicone
- EPDM
- FKM

Finish:
- 32R_a sanitary finish ID and OD

Butterfly Valve Selection

Index

5101 series 198-203
5102 series 204-205
5104 series 206-209
5115 Series 210
Automation 211
B51 series 212-213

B5101 Series **Butterfly Valves**

Butterfly Valve Selection

Product Specifications

Features:

- 100% hydraulic tested / 100% inspected
- all wetted surfaces are sanitary finished to < $32R_a$
- field serviceable (no special tools required)
- seat materials available include: silicone, EPDM, FKM, (6" EPDM and silicone, 8" EPDM only)
- vacuum rating: 0.4 inches Hg at 68°F
- operating temperature range: **15°F** to **200°F**
- private lable handle covers available for valves supplied with push handles, see page 196

Information supplied based on water media @ 68°F

Size	Break Torque (in. lbs.) silicone	Break Torque (in. lbs.) EPDM	Break Torque (in. lbs.) FKM	Pressure Rating (PSI)	Flow Coefficient (CV)	Weight w/standard handle (lbs.)
½"	20	75	70	140	7	2.2
¾"	20	75	70	140	11	2.2
1"	20	75	70	140	23	2.2
1½"	40	130	125	140	80	2.9
2"	55	165	175	140	230	3.5
2½"	70	210	220	110	264	3.7
3"	165	350	310	110	372	4.4
4"	350	540	450	85	800	9.0
6"	700	1550	n/a	60	1200	18.5
8"	n/a	1650	n/a	60	2800	13.6

B5101 Series Butterfly Valve with Pull Handle

Clamp End

Part Numbers

Size	*316 stainless steel with Silicone seats*	*316 stainless steel with EPDM seats*	*316 stainless steel with FKM seats*
½"	***B5101S050CC-A***	***B5101E050CC-A***	***B5101V050CC-A***
¾"	***B5101S075CC-A***	***B5101E075CC-A***	***B5101V075CC-A***
1"	***B5101S100CC-A***	***B5101E100CC-A***	***B5101V100CC-A***
1½"	***B5101S150CC-A***	***B5101E150CC-A***	***B5101V150CC-A***
2"	***B5101S200CC-A***	***B5101E200CC-A***	***B5101V200CC-A***
2½"	***B5101S250CC-A***	***B5101E250CC-A***	***B5101V250CC-A***
3"	***B5101S300CC-A***	***B5101E300CC-A***	***B5101V300CC-A***
4" [1]	***B5101S400CC-A***	***B5101E400CC-A***	***B5101V400CC-A***
6"	***B5101S600CC-A***	***B5101E600CC-A***	---
8"	---	***B5101E800CC-A***	---

[1] high pressure 4" butterfly is available, call Dixon Sanitary for more information

Dimensions

Size	A	B	C	D	E	F	G
½"	4.4	2.8	1.4	0.9	3.5	.37	3.1
¾"	4.4	2.8	1.4	0.9	3.5	.62	3.1
1"	4.4	2.8	1.4	0.9	3.5	0.9	3.1
1½"	4.4	2.8	1.4	0.9	3.5	1.4	3.1
2"	4.4	3.1	1.4	0.9	3.8	1.9	3.9
2½"	4.4	3.5	1.4	0.9	3.8	2.4	4.6
3"	6.2	3.8	1.3	1.2	4.1	2.9	5.2
4"	6.2	4.5	1.3	1.2	4.8	3.8	6.7
6"	11.5	5.5	1.3	1.2	5.5	5.8	8.5
8"	18.0	6.9	1.6	1.2	4.9	7.8	11.2

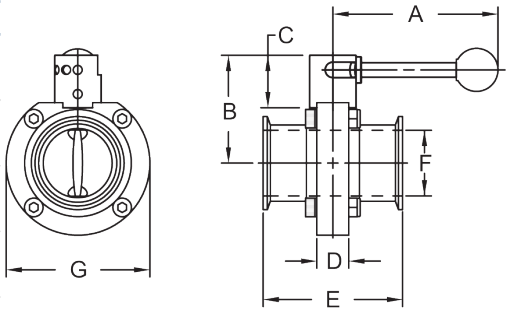

B5101 Series Butterfly Valve with Pull Handle

Weld End

Part Numbers

Size	*316 stainless steel with Silicone seats*	*316 stainless steel with EPDM seats*	*316 stainless steel with FKM seats*
½"	***B5101S050BB-A***	***B5101E050BB-A***	***B5101V050BB-A***
¾"	***B5101S075BB-A***	***B5101E075BB-A***	***B5101V075BB-A***
1"	***B5101S100BB-A***	***B5101E100BB-A***	***B5101V100BB-A***
1½"	***B5101S150BB-A***	***B5101E150BB-A***	***B5101V150BB-A***
2"	***B5101S200BB-A***	***B5101E200BB-A***	***B5101V200BB-A***
2½"	***B5101S250BB-A***	***B5101E250BB-A***	***B5101V250BB-A***
3"	***B5101S300BB-A***	***B5101E300BB-A***	***B5101V300BB-A***
4"	***B5101S400BB-A***	***B5101E400BB-A***	***B5101V400BB-A***
6"	***B5101S600BB-A***	***B5101E600BB-A***	---
8"	---	***B5101E800BB-A***	---

Dimensions

Size	A	B	C	D	E	F	G
½"	4.3	2.6	1.3	0.9	1.9	.37	3.1
¾"	4.3	2.6	1.3	0.9	1.9	.62	3.1
1"	4.4	2.8	1.4	0.9	1.9	0.9	3.1
1½"	4.4	2.8	1.4	0.9	1.9	1.4	3.1
2"	4.4	3.1	1.4	0.9	2.0	1.9	3.9
2½"	4.4	3.5	1.4	0.9	2.1	2.4	4.6
3"	6.2	3.8	1.3	1.2	2.5	2.9	5.2
4"	6.2	4.5	1.3	1.2	3.1	3.8	6.7
6"	11.5	5.5	1.3	1.2	5.5	5.8	8.5
8"	18.0	6.9	1.6	1.2	4.9	7.8	11.2

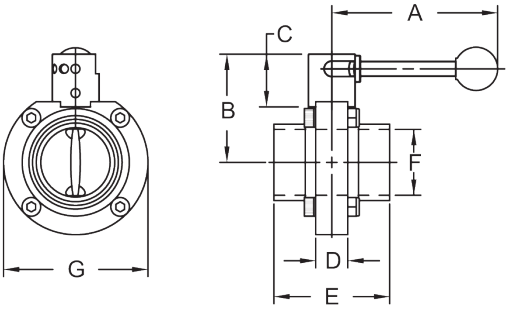

All dimensions are in inches unless otherwise noted. Engineering dimensions are available upon request.
Specifications are subject to change without notice.

B5101 Series Butterfly Valve with Infinite Handle

Clamp End

Part Numbers

Size	*316 stainless steel with Silicone seats*	*316 stainless steel with EPDM seats*	*316 stainless steel with FKM seats*
½"	***B5101S050CC-B***	***B5101E050CC-B***	***B5101V050CC-B***
¾"	***B5101S075CC-B***	***B5101E075CC-B***	***B5101V075CC-B***
1"	***B5101S100CC-B***	***B5101E100CC-B***	***B5101V100CC-B***
1½"	***B5101S150CC-B***	***B5101E150CC-B***	***B5101V150CC-B***
2"	***B5101S200CC-B***	***B5101E200CC-B***	***B5101V200CC-B***
2½"	***B5101S250CC-B***	***B5101E250CC-B***	***B5101V250CC-B***
3"	***B5101S300CC-B***	***B5101E300CC-B***	***B5101V300CC-B***
4"	***B5101S400CC-B***	***B5101E400CC-B***	***B5101V400CC-B***

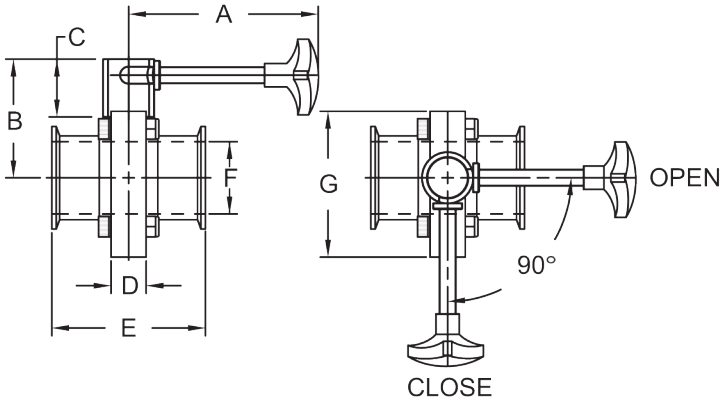

Dimensions

Size	A	B	C	D	E	F	G
½"	4.3	2.6	1.3	0.9	3.5	0.37	3.1
¾"	4.3	2.6	1.3	0.9	3.5	0.62	3.1
1"	4.3	2.6	1.3	0.9	3.5	0.9	3.1
1½"	4.3	2.6	1.3	0.9	3.5	1.4	3.1
2"	4.3	2.9	1.3	0.9	3.8	1.9	3.1
2½"	4.3	3.3	1.3	0.9	3.8	2.4	4.6
3"	6.4	3.6	1.3	1.2	4.1	2.9	5.2
4"	6.4	4.4	1.3	1.2	4.8	3.8	6.7

B5101 Series Butterfly Valve with Infinite Handle

Weld End

Part Numbers

Size	*316 stainless steel with Silicone seats*	*316 stainless steel with EPDM seats*	*316 stainless steel with FKM seats*
½"	***B5101S050BB-B***	***B5101E050BB-B***	***B5101V050BB-B***
¾"	***B5101S075BB-B***	***B5101E075BB-B***	***B5101V075BB-B***
1"	***B5101S100BB-B***	***B5101E100BB-B***	***B5101V100BB-B***
1½"	***B5101S150BB-B***	***B5101E150BB-B***	***B5101V150BB-B***
2"	***B5101S200BB-B***	***B5101E200BB-B***	***B5101V200BB-B***
2½"	***B5101S250BB-B***	***B5101E250BB-B***	***B5101V250BB-B***
3"	***B5101S300BB-B***	***B5101E300BB-B***	***B5101V300BB-B***
4"	***B5101S400BB-B***	***B5101E400BB-B***	***B5101V400BB-B***

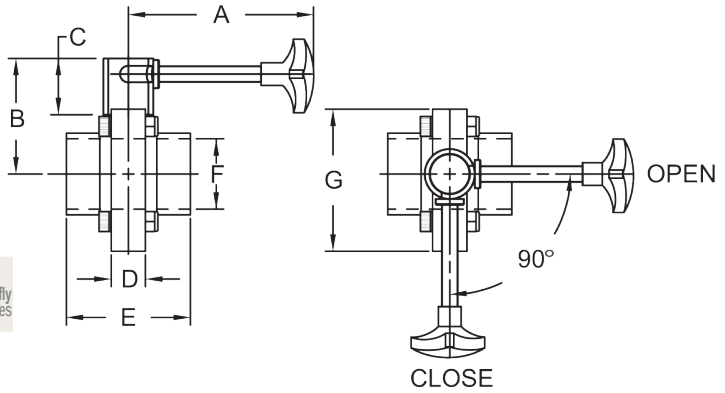

Dimensions

Size	A	B	C	D	E	F	G
½"	4.3	2.6	1.3	0.9	1.9	0.37	3.1
¾"	4.3	2.6	1.3	0.9	1.9	0.62	3.1
1"	4.3	2.6	1.3	0.9	1.9	0.9	3.1
1½"	4.3	2.6	1.3	0.9	1.9	1.4	3.1
2"	4.3	2.9	1.3	0.9	2.0	1.9	3.1
2½"	4.3	3.3	1.3	0.9	2.1	2.4	4.6
3"	6.4	3.6	1.3	1.2	2.5	2.9	5.2
4"	6.4	4.4	1.3	1.2	3.1	3.8	6.7

All dimensions are in inches unless otherwise noted. Engineering dimensions are available upon request.
Specifications are subject to change without notice.

B5101 Series Butterfly Valve with Trigger Handle

Clamp End

Feature:
- lockout / tagout handle

Part Numbers

Size	*316 stainless steel with Silicone seats*	*316 stainless steel with EPDM seats*	*316 stainless steel with FKM seats*
½"	***B5101S050CC-C***	***B5101E050CC-C***	***B5101V050CC-C***
¾"	***B5101S075CC-C***	***B5101E075CC-C***	***B5101V075CC-C***
1"	***B5101S100CC-C***	***B5101E100CC-C***	***B5101V100CC-C***
1½"	***B5101S150CC-C***	***B5101E150CC-C***	***B5101V150CC-C***
2"	***B5101S200CC-C***	***B5101E200CC-C***	***B5101V200CC-C***
2½"	***B5101S250CC-C***	***B5101E250CC-C***	***B5101V250CC-C***
3"	***B5101S300CC-C***	***B5101E300CC-C***	***B5101V300CC-C***
4"	***B5101S400CC-C***	***B5101E400CC-C***	***B5101V400CC-C***

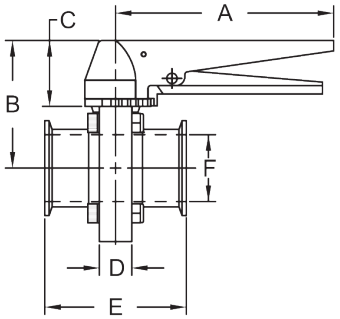

Dimensions

Size	A	B	C	D	E	F	G
½"	6.6	3.0	1.7	0.9	3.5	0.37	3.1
¾"	6.6	3.0	1.7	0.9	3.5	0.62	3.1
1"	6.6	3.0	1.7	0.9	3.5	0.9	3.1
1½"	6.6	3.0	1.7	0.9	3.5	1.4	3.1
2"	6.6	3.5	1.7	0.9	3.8	1.9	3.1
2½"	6.6	3.7	1.7	0.9	3.8	2.4	4.6
3"	6.6	3.9	1.7	1.2	4.1	2.9	5.2
4"	6.6	4.8	1.7	1.2	4.8	3.8	6.7

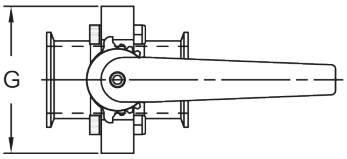

B5101 Series Butterfly Valve with Trigger Handle

Weld End

Feature:
- lockout / tagout handle

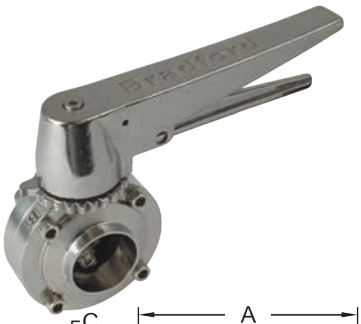

Part Numbers

Size	*316 stainless steel with Silicone seats*	*316 stainless steel with EPDM seats*	*316 stainless steel with FKM seats*
½"	***B5101S050BB-C***	***B5101E050BB-C***	***B5101V050BB-C***
¾"	***B5101S075BB-C***	***B5101E075BB-C***	***B5101V075BB-C***
1"	***B5101S100BB-C***	***B5101E100BB-C***	***B5101V100BB-C***
1½"	***B5101S150BB-C***	***B5101E150BB-C***	***B5101V150BB-C***
2"	***B5101S200BB-C***	***B5101E200BB-C***	***B5101V200BB-C***
2½"	***B5101S250BB-C***	***B5101E250BB-C***	***B5101V250BB-C***
3"	***B5101S300BB-C***	***B5101E300BB-C***	***B5101V300BB-C***
4"	***B5101S400BB-C***	***B5101E400BB-C***	***B5101V400BB-C***

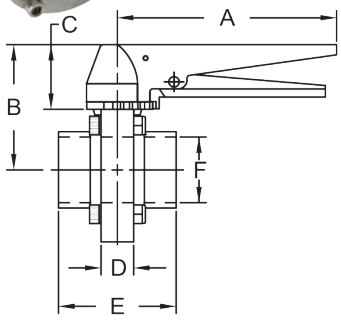

Dimensions

Size	A	B	C	D	E	F	G
½"	6.6	3.0	1.7	0.9	1.9	0.37	3.1
¾"	6.6	3.0	1.7	0.9	1.9	0.62	3.1
1"	6.6	3.0	1.7	0.9	1.9	0.9	3.1
1½"	6.6	3.0	1.7	0.9	1.9	1.4	3.1
2"	6.6	3.5	1.7	0.9	2.0	1.9	3.9
2½"	6.6	3.7	1.7	0.9	2.1	2.4	4.6
3"	6.6	3.9	1.7	1.2	2.5	2.9	5.2
4"	6.6	4.8	1.7	1.2	3.1	2.9	6.7

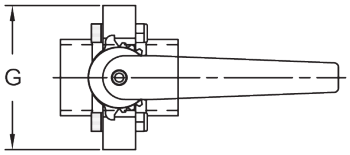

All dimensions are in inches unless otherwise noted. Engineering dimensions are available upon request.
Specifications are subject to change without notice.

B5101 Series Butterfly Valve with Push Handle

Clamp End

Part Numbers

Size	*316 stainless steel with Silicone seats*	*316 stainless steel with EPDM seats*	*316 stainless steel with FKM seats*
½"	***B5101S050CC-D***	***B5101E050CC-D***	***B5101V050CC-D***
¾"	***B5101S075CC-D***	***B5101E075CC-D***	***B5101V075CC-D***
1"	***B5101S100CC-D***	***B5101E100CC-D***	***B5101V100CC-D***
1½"	***B5101S150CC-D***	***B5101E150CC-D***	***B5101V150CC-D***
2"	***B5101S200CC-D***	***B5101E200CC-D***	***B5101V200CC-D***
2½"	***B5101S250CC-D***	***B5101E250CC-D***	***B5101V250CC-D***
3"	***B5101S300CC-D***	***B5101E300CC-D***	***B5101V300CC-D***
4"	***B5101S400CC-D***	***B5101E400CC-D***	***N/A***

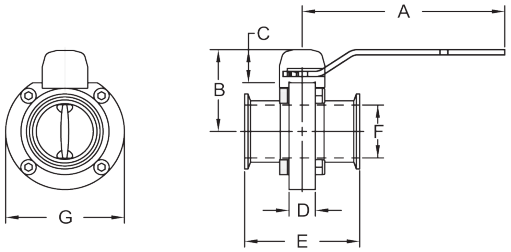

Dimensions

Size	A	B	C	D	E	F	G
½"	6.7	2.4	1.1	0.9	3.5	0.37	3.1
¾"	6.7	2.4	1.1	0.9	3.5	0.62	3.1
1"	6.7	2.4	1.1	0.9	3.5	0.9	3.1
1½"	6.7	2.0	1.1	0.9	3.5	1.4	3.1
2"	6.7	2.7	1.1	0.9	3.8	1.9	3.1
2½"	6.7	3.1	1.1	0.9	3.8	2.4	4.6
3"	9.0	3.3	1.1	1.2	4.1	2.9	5.2
4"	9.0	4.1	1.1	1.2	4.8	3.8	6.7

B5101 Series Butterfly Valve with Push Handle

Weld End

Part Numbers

Size	*316 stainless steel with Silicone seats*	*316 stainless steel with EPDM seats*	*316 stainless steel with FKM seats*
½"	***B5101S050BB-D***	***B5101E050BB-D***	***B5101V050BB-D***
¾"	***B5101S075BB-D***	***B5101E075BB-D***	***B5101V075BB-D***
1"	***B5101S100BB-D***	***B5101E100BB-D***	***B5101V100BB-D***
1½"	***B5101S150BB-D***	***B5101E150BB-D***	***B5101V150BB-D***
2"	***B5101S200BB-D***	***B5101E200BB-D***	***B5101V200BB-D***
2½"	***B5101S250BB-D***	***B5101E250BB-D***	***B5101V250BB-D***
3"	***B5101S300BB-D***	***B5101E300BB-D***	***B5101V300BB-D***
4"	***B5101S400BB-D***	***B5101E400BB-D***	***N/A***

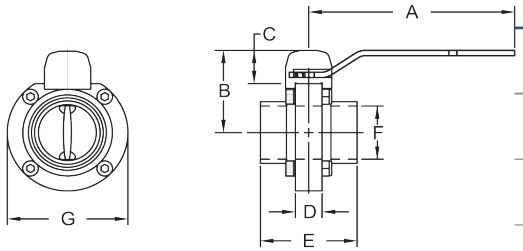

Dimensions

Size	A	B	C	D	E	F	G
½"	6.7	2.4	1.1	0.9	1.9	0.37	3.1
¾"	6.7	2.4	1.1	0.9	1.9	0.62	3.1
1"	6.7	2.4	1.1	0.9	1.9	0.9	3.1
1½"	6.7	2.0	1.1	0.9	1.9	1.4	3.1
2"	6.7	2.7	1.1	0.9	2.0	1.9	3.1
2½"	6.7	3.1	1.1	0.9	2.1	2.4	4.6
3"	9.0	3.3	1.1	1.2	2.5	2.9	5.2
4"	9.0	4.1	1.1	1.2	3.1	3.8	6.7

All dimensions are in inches unless otherwise noted. Engineering dimensions are available upon request.
Specifications are subject to change without notice.

B5101 Series Butterfly Valves

Bill of Materials

Item	Description	Material	Quantity
	Push Handle		
1D	spring	304	1
2D	hub	CF8	1
3D	hex socket bolt	304	1
4D	handle	304	1
	Trigger Handle		
1C	sprocket	CF8	1
2C	handle	CF8	1
3C	hex socket bolt	304	1
4C	pin	304	1
5C	spring	304	1
6C	trigger	CF8	1
	Infinite Handle		
1B	hub	CF8	1
2B	hex socket screw	304	1
3B	handle shaft	304	1
4B	knob	polymer	1
5B	hub housing	CF8	1
	Pull Handle		
1A	hub housing	CF8	1
2A	hub	CF8	1
3A	handle shaft	304	1
4A	hex socket screw	304	1
5A	spring	304	1
6A	knob	polymer	1
	Valve		
1	body half	316	2
2	disc	316	1
3	seat	silicone EPDM FKM	1
4	bushing	polyacetal	2
5	hex nut	304	4*
6	bolt	304	4*
6W	optional wing nut kit	304	4*

* 4" and 8" valves have 6 bolts and nuts
* 6" valve has 8 bolts and nuts

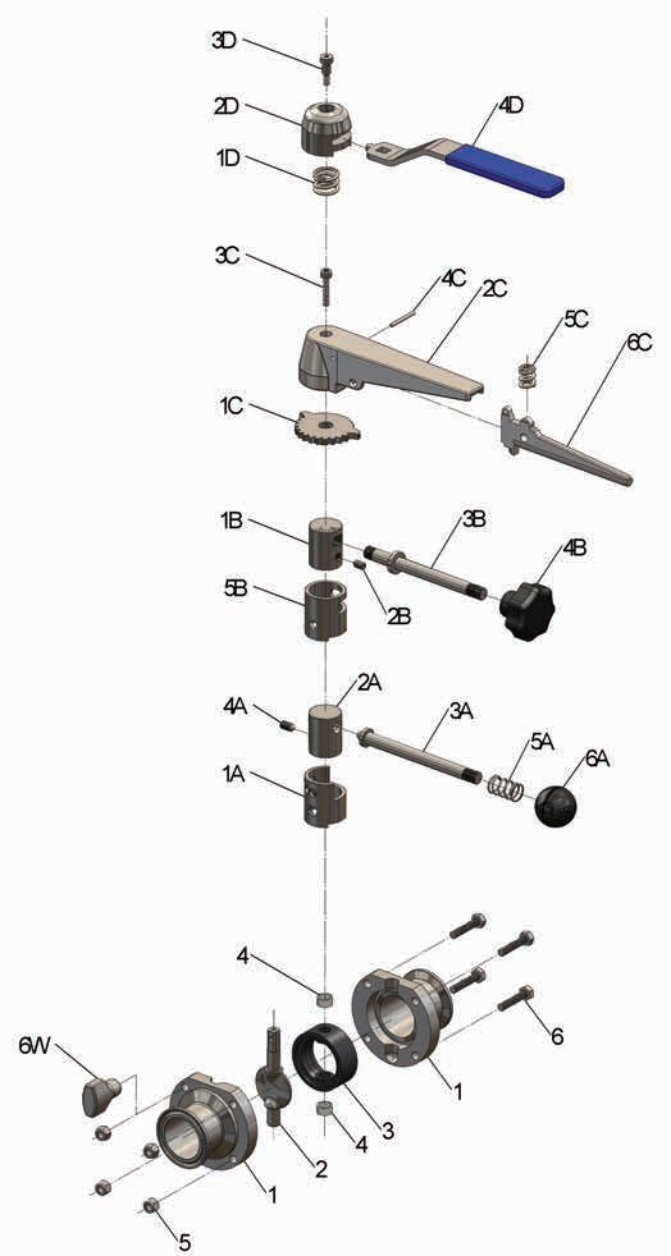

Repair Kits

Size	*Red Silicone*	*Black EPDM*	*Brown FKM*
½"-1"	***B5101-RKS100***	***B5101-RKE100***	***B5101-RKV100***
1½"	***B5101-RKS150***	***B5101-RKE150***	***B5101-RKV150***
2"	***B5101-RKS200***	***B5101-RKE200***	***B5101-RKV200***
2½"	***B5101-RKS250***	***B5101-RKE250***	***B5101-RKV250***
3"	***B5101-RKS300***	***B5101-RKE300***	***B5101-RKV300***
4"	***B5101-RKS400***	***B5101-RKE400***	***B5101-RKV400***
6"	***B5101-RKS600***	***B5101-RKE600***	---
8"	---	***B5101-RKE800***	---

Repair Kit contains:
(1) seat
(2) bushings

B5102 Series Butterfly Valves

Product Specifications

Information supplied based on water media @ 68°F

Size	Break Torque (in-lbs.)	Assembly Torque (in-lbs.)	Pressure Rating (PSI)	Flow Coefficent (C_v)	Weight w/ standard handle (lbs.)
1"	125	36	140	23	1.5
1½"	185	36	140	80	2
2"	200	21.6	120	230	2.5
2½"	260	21.6	120	264	3
3"	350	28.8	100	372	4
4"	495	43.2	70	800	6

Features:

- all wetted surfaces are sanitary finish 316L stainless steel
- all sizes use only ¾" of line space
- the grooved clamp housing connects directly to the corresponding sanitary clamp size
- PTFE valve disc bushings reduce friction and increase cycle life
- 3-position reversible handle
- 100% tested / 100% inspected
- field serviceable (no special tools required)
- seat materials available include: silicone, EPDM, FKM
- can be modified for lockout / tagout
- various automatic operations available
- minimal line pressure: 0.4 inches Hg vacuum @ 68°F
- operating temperature range: **15°F** to **200°F**

Part Numbers

Size	*316L stainless steel with Silicone seats*	*316L stainless steel with EPDM seats*	*316L stainless steel with FKM seats*
1"	***B5102S100-A***	***B5102E100-A***	***B5102V100-A***
1½"	***B5102S150-A***	***B5102E150-A***	***B5102V150-A***
2"	***B5102S200-A***	***B5102E200-A***	***B5102V200-A***
2½"	***B5102S250-A***	***B5102E250-A***	***B5102V250-A***
3"	***B5102S300-A***	***B5102E300-A***	***B5102V300-A***
4"	***B5102S400-A***	***B5102E400-A***	***B5102V400-A***

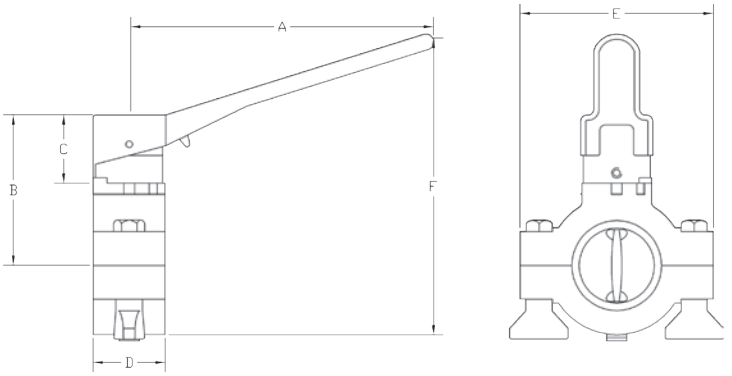

Dimensions

Size	A	B	C	D	E	F
1"	5.6	2.8	1.3	1.3	3.6	5.6
1½"	5.6	2.8	1.3	1.3	3.6	5.6
2"	5.6	3.0	1.3	1.3	4.1	6.1
2½"	5.6	3.3	1.3	1.3	4.6	6.6
3"	5.6	3.6	1.3	1.3	5.3	7.1
4"	5.6	4.1	1.3	1.3	6.4	8.2

All dimensions are in inches unless otherwise noted. Engineering dimensions are available upon request.
Specifications are subject to change without notice.

B5102 Series Butterfly Valves

Bill of Materials

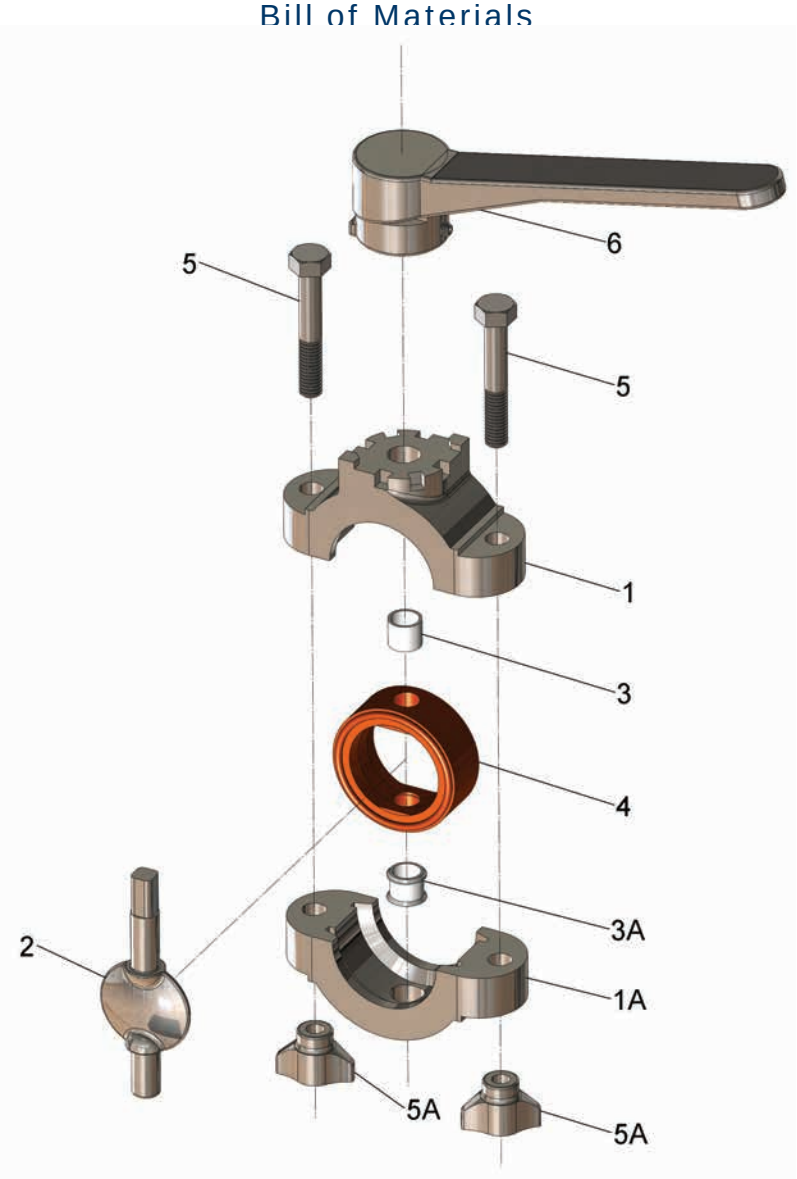

Item #	Description	Material	Quantity
1	upper body half	CF8, stainless	1
1A	lower body half	CF8, stainless	1
2	disc	316L stainless	1
3	upper bushing	PTFE	1
3A	lower bushing	PTFE	1
4	seat	silicone, EPDM, FKM	1
5	bolts	304 stainless	2
5A	wing nuts	304 stainless	2
6	handle	CF8, Stainless	1

Repair Kits

Repair Kit contains:
(1) seat
(2) bushings

Size	*Red Silicone*	*Black EPDM*	*Brown FKM*
1"	***B5102-RKS100***	***B5102-RKE100***	***B5102-RKV100***
1½"	***B5102-RKS150***	***B5102-RKE150***	***B5102-RKV150***
2"	***B5102-RKS200***	***B5102-RKE200***	***B5102-RKV200***
2½"	***B5102-RKS250***	***B5102-RKE250***	***B5102-RKV250***
3"	***B5102-RKS300***	***B5102-RKE300***	***B5102-RKV300***
4"	***B5102-RKS400***	***B5102-RKE400***	***B5102-RKV400***

B5104 Series Butterfly Valves

Butterfly Valve Selection

Product Specifications

Features:

- 100% tested / 100% inspected
- all wetted surfaces are sanitary finished to < 32R_a
- field serviceable (no special tools required)
- seat materials available include: silicone, EPDM, FKM
- PTFE bushings reduce friction and increase cycle life
- private label handle covers available, see page 196
- minimal line pressure: 0.4 inches Hg vacuum @ 68°F
- operating temperature range: **15°F** to **200°F**

Information supplied based on water media @ 68°F

Size	Break Torque (in-lbs.) Silicone	Break Torque (in-lbs.) EPDM	Break Torque (in-lbs.) FKM	Pressure Rating (PSI)	Flow Coefficent (C_V)	Weight with standard handle (lbs.)
1"	50	105	45	140	23	1.8
1½"	60	135	55	140	80	1.2
2"	175	180	125	140	230	1.6
2½"	250	260	200	110	264	2.0
3"	300	305	250	110	372	2.4
4"	350	360	300	85	800	4.8

B5104 Series Butterfly Valves

Clamp End

Size	*CF8M stainless steel with Silicone seats*	*CF8M stainless steel with EPDM seats*	*CF8M stainless steel with FKM seats*
1"	***B5104S100CC-D***	***B5104E100CC-D***	***B5104V100CC-D***
1½"	***B5104S150CC-D***	***B5104E150CC-D***	***B5104V150CC-D***
2"	***B5104S200CC-D***	***B5104E200CC-D***	***B5104V200CC-D***
2½"	***B5104S250CC-D***	***B5104E250CC-D***	***B5104V250CC-D***
3"	***B5104S300CC-D***	***B5104E300CC-D***	***B5104V300CC-D***
4"	***B5104S400CC-D***	***B5104E400CC-D***	***B5104V400CC-D***

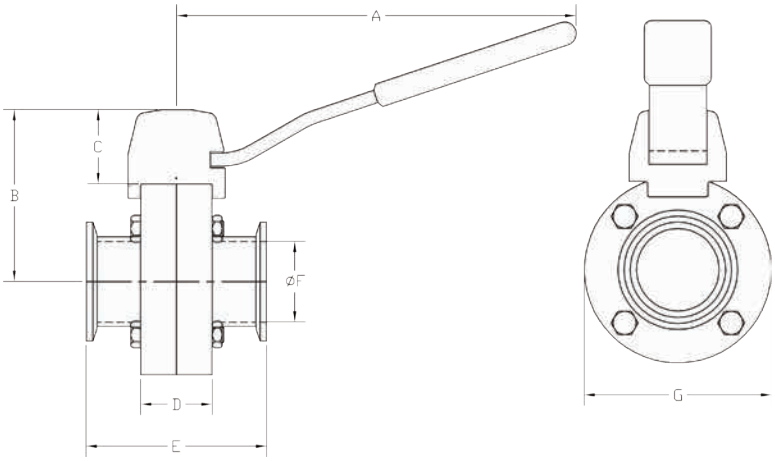

Dimensions

Size	A	B	C	D	E	F	G
1"	6.6	2.9	1.2	1.2	3.0	0.9	3.1
1½"	6.6	2.9	1.2	1.2	3.0	1.4	3.1
2"	6.6	3.2	1.2	1.2	3.0	1.9	3.7
2½"	6.6	3.4	1.2	1.2	3.0	2.4	4.2
3"	6.6	3.7	1.2	1.2	3.0	2.9	4.8
4"	6.6	4.7	1.7	1.5	3.5	3.8	5.9

All dimensions are in inches unless otherwise noted. Engineering dimensions are available upon request.
Specifications are subject to change without notice.

B5104 Series Butterfly Valves

Weld End

Size	*CF8M stainless steel with Silicone seats*	*CF8M stainless steel with EPDM seats*	*CF8M stainless steel with FKM seats*
1"	***B5104S100BB-D***	***B5104E100BB-D***	***B5104V100BB-D***
1½"	***B5104S150BB-D***	***B5104E150BB-D***	***B5104V150BB-D***
2"	***B5104S200BB-D***	***B5104E200BB-D***	***B5104V200BB-D***
2½"	***B5104S250BB-D***	***B5104E250BB-D***	***B5104V250BB-D***
3"	***B5104S300BB-D***	***B5104E300BB-D***	***B5104V300BB-D***
4"	***B5104S400BB-D***	***B5104E400BB-D***	***B5104V400BB-D***

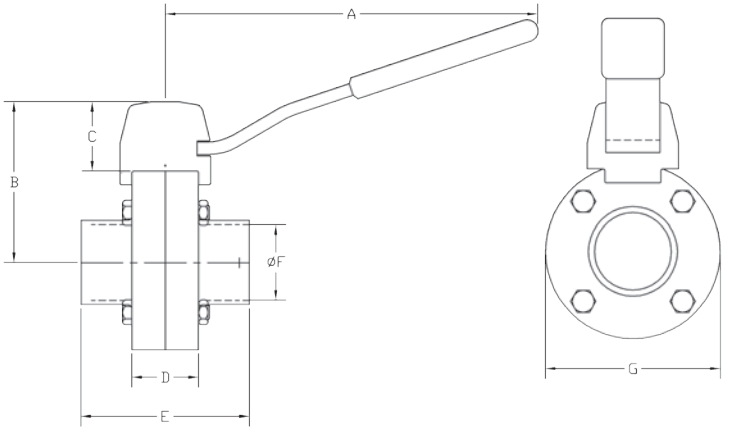

Dimensions

Size	A	B	C	D	E	F	G
1"	6.6	2.9	1.2	1.2	3.0	0.9	3.1
1½"	6.6	2.9	1.2	1.2	3.0	1.4	3.1
2"	6.6	3.2	1.2	1.2	3.0	1.9	3.7
2½"	6.6	3.4	1.2	1.2	3.0	2.4	4.2
3"	6.6	3.7	1.2	1.2	3.0	2.9	4.8
4"	6.6	4.7	1.7	1.5	3.5	3.8	5.9

All dimensions are in inches unless otherwise noted. Engineering dimensions are available upon request.
Specifications are subject to change without notice.

B5104 Series Butterfly Valves

Bill of Materials

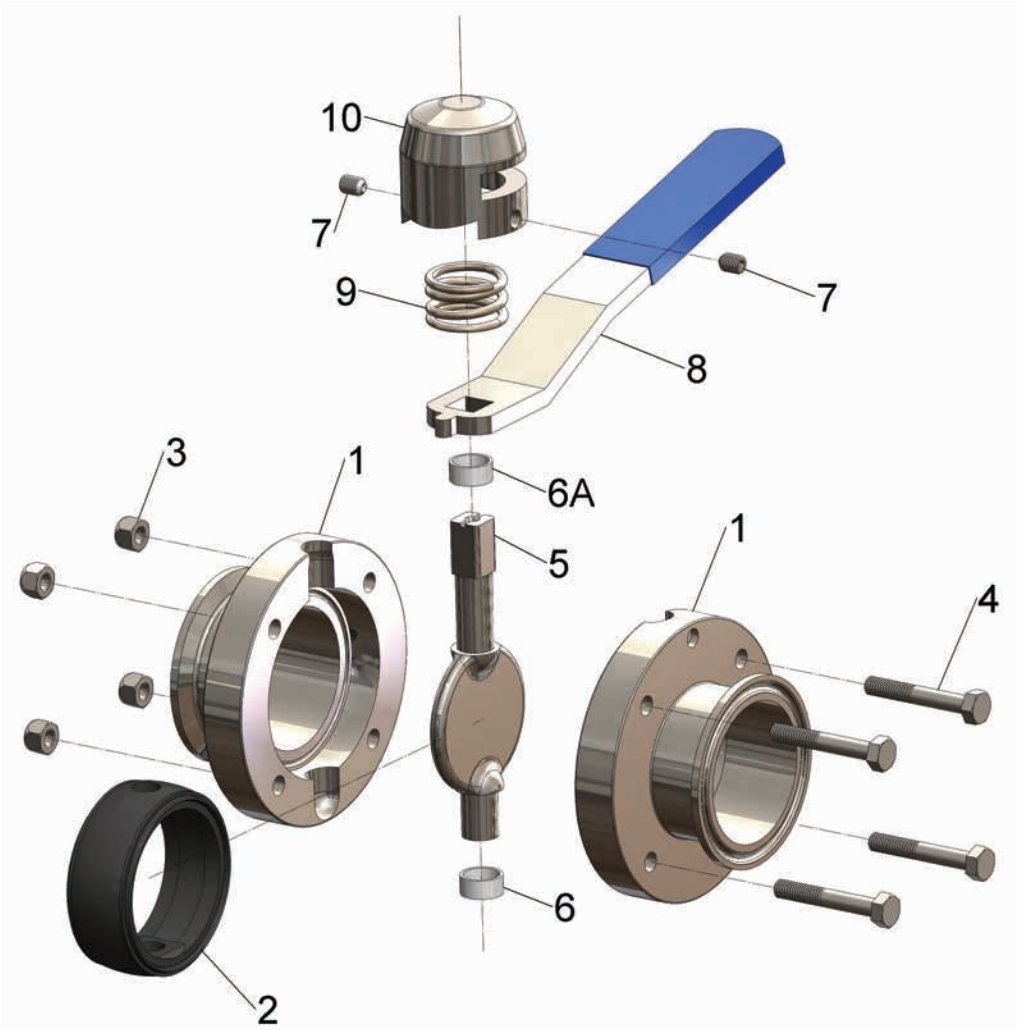

Item #	Description	Material	Quantity
1	body half	CF8M	2
2	seat	silicone, EPDM, FKM	1
3	hex nut	304 stainless	4 *
4	bolt	304 stainless	4 *
5	disc	CF-3M stainless	1
6	bushing	PTFE	1
6a	split bushing	PTFE	1
7	hex socket screw	304 stainless	2
8	handle	CF8 stainless	1
9	spring	304 stainless	1
10	hub	CF8 stainless	1

* 4" valve quantity (6)

Repair Kits

Size	*Red Silicone*	*Black EPDM*	*Black FKM*
1"	***B5104-RKS100***	***B5104-RKE100***	***B5104-RKV100***
1½"	***B5104-RKS150***	***B5104-RKE150***	***B5104-RKV150***
2"	***B5104-RKS200***	***B5104-RKE200***	***B5104-RKV200***
2½"	***B5104-RKS250***	***B5104-RKE250***	***B5104-RKV250***
3"	***B5104-RKS300***	***B5104-RKE300***	***B5104-RKV300***
4"	***B5104-RKS400***	***B5104-RKE400***	***B5104-RKV400***

Repair Kit contains:
(1) seat
(1) bushing
(1) split bushing

NEW FOR 2013

B5115 Series - 304 Stainless Steel **Butterfly Valve**s Clamp End with Trigger Handle

Features:

- 100% tested / 100% inspected
- all wetted surface are sanitary finish to <32R_a
- field serviceable (no special tools required)
- silicone seats
- blue trigger handle
- repair kits available
- operating temperature range: **15° - 200°F**
- maximum operating pressure: **110 PSI**

Clamp End

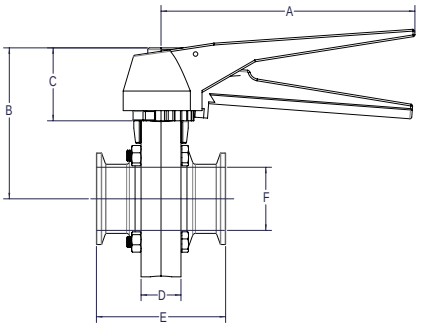

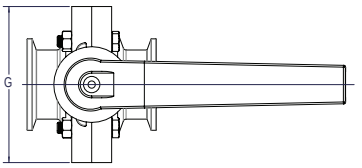

Size	Dimensions							*304 Stainless Steel*
	A	B	C	D	E	F	G	Part #
1½"	5.70	3.40	1.60	0.87	2.80	1.40	3.40	***B5115S150CC-C***
2"	5.70	3.60	1.60	0.87	3.00	1.90	3.90	***B5115S200CC-C***
3"	5.70	4.20	1.60	0.87	3.30	2.90	5.00	***B5115S300CC-C***
4"	6.89	5.51	1.60	0.87	3.62	3.83	6.89	***B5115S400CC-C***

Weld End

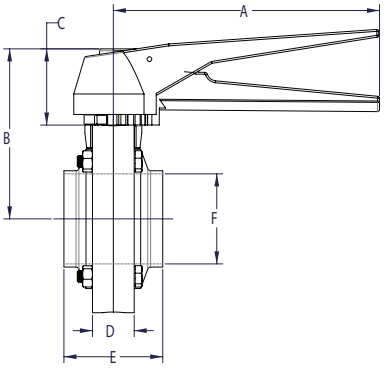

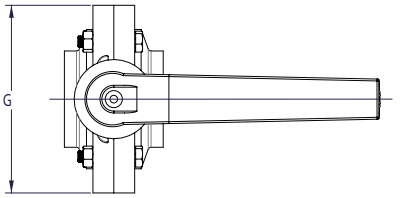

Size	Dimensions							*304 Stainless Steel*
	A	B	C	D	E	F	G	Part #
1½"	5.70	3.40	1.60	0.87	1.97	1.40	3.40	***B5115S150BB-C***
2"	5.70	3.60	1.60	0.87	2.05	1.90	3.90	***B5115S200BB-C***
3"	5.70	4.20	1.60	0.87	2.12	2.90	5.00	***B5115S300BB-C***
4"	6.89	5.51	1.60	0.87	2.52	3.83	6.89	***B5115S400BB-C***

Replacement Seats

Size	Part #
1½"	***B5115-RKS150***
2"	***B5115-RKS200***
3"	***B5115-RKS300***
4"	***B5115-RKS400***

Butterfly Valve Automation Examples

Features:
- B5101 butterfly valve
- clamp x clamp, stainless steel vertical canister, spring return, normally closed
- (1) 10-30VDC proximity sensor

Features:
- B5101 butterfly valve
- clamp x clamp, stainless steel vertical canister, double acting

Features:
- B5104 butterfly valve
- clamp x clamp, stainless steel vertical canister, spring return
- 110VAC control top

Features:
- B5102 butterfly valve, stainless steel horizontal actuator, double acting
- NEMA 4/4X 3-15PSI pneumatic positioner

Features:
- B5101 butterfly valve, clamp x clamp, stainless steel rack and pinion actuator, spring return
- NEMA 4/4X 3-15PSI pneumatic positioner

Features:
- B5101 butterfly valve, clamp x clamp
- standard 4-position handle with a NEMA 4 SPDT limit switch with 2 mechanical switches

B51 Series **Industrial Butterfly Valves**

Product Specifications

Lug Butterfly Valve

Wafer Butterfly Valve

Features:

- wafer and lug type body
- cast iron body with extended neck
- nickel plated ductile iron disc
- seat backing ring ensures blowout proof service
- installs between Standard ANSI Class 150# flanges
- conforms to MSS-SP-67,MSS-SP-25, API-609
- no taper pins
- field repairable (seat kits available)
- undercut available
- EPDM seat
- maximum pressure 200 PSI (bi-directional)
- temperature range: **-20°F** to **250°F** (depending upon seat material)
- wide variety of seat, disc and body materials available
- additional sizes available
- various manual or automatic operators available

Valve Seating Torque (in. lbs.)

Size	Standard Disc at Pressure Differential (ΔP)			
	50 ΔP	100 ΔP	150 ΔP	200 ΔP
1½"	80	95	100	105
2"	99	105	110	116
2½"	146	160	172	186
3"	198	206	230	240
4"	250	300	340	380
5"	420	470	520	580
6"	600	690	782	873
8"	960	1100	1280	1410
10"	1590	1790	2000	2180
12"	2390	2600	3011	2313

B51 Series Industrial Butterfly Valves

Dimensions (wafer)

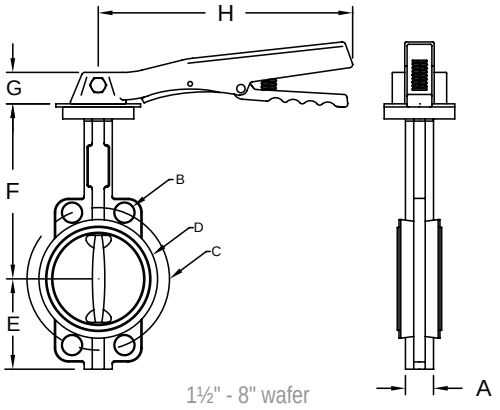

1½" - 8" wafer

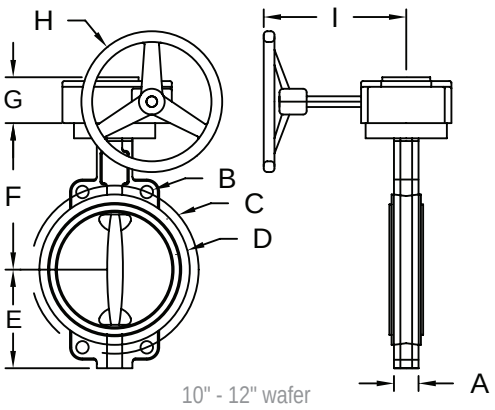

10" - 12" wafer

Part Number	Size	A	B	C	D	E	F	G	H	I
B5121E150WW-C	1½"	1.30	4-18	3.88	3.74	2.56	5.75	0.88	8.00	n/a
B5121E200WW-C	2"	1.69	4-18	4.75	3.82	3.15	5.94	0.88	8.00	n/a
B5121E250WW-C	2½"	1.81	4-18	5.50	4.45	3.62	6.89	0.88	8.00	n/a
B5121E300WW-C	3"	1.81	4-18	6.00	4.92	3.74	7.13	0.88	8.00	n/a
B5121E400WW-C	4"	2.50	4-22	7.50	6.14	4.49	7.87	1.00	10.60	n/a
B5121E500WW-C	5"	2.20	4-22	8.50	7.36	5.00	8.39	1.00	10.60	n/a
B5121E600WW-C	6"	2.20	4-22	9.50	8.46	5.47	8.90	1.00	10.60	n/a
B5121E800WW-C	8"	2.36	4-22	11.75	10.51	6.59	10.24	1.25	12.60	n/a
B5121E1000WW-G	10"	2.68	4-26	14.25	13.00	8.00	11.50	3.21	9.84	8.86
B5121E1200WW-G	12"	3.07	4-26	17.00	14.96	9.53	13.27	3.21	11.80	8.86

Dimensions (lug)

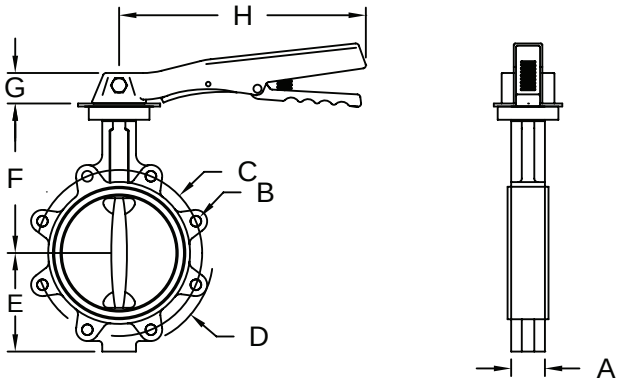

2" - 8" wafer

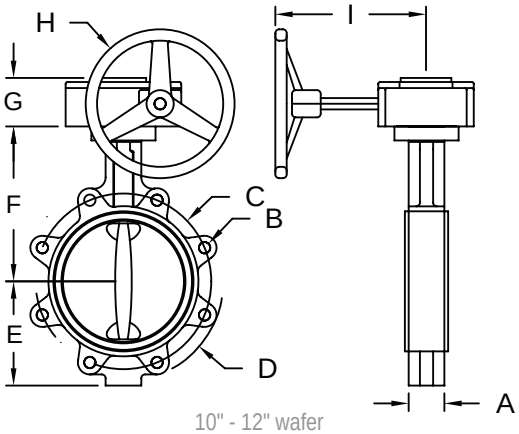

10" - 12" wafer

Part Number	Size	A	B	C	D	E	F	G	H	I
B5121E200LL-C	2"	1.69	4-5/18-11 UNC	4.75	5.95	3.15	5.94	0.88	8.00	n/a
B5121E250LL-C	2½"	1.81	4-5/18-11 UNC	5.50	6.97	3.62	6.89	0.88	8.00	n/a
B5121E300LL-C	3"	1.81	4-5/18-11 UNC	6.00	7.56	3.74	7.13	0.88	8.00	n/a
B5121E400LL-C	4"	2.05	8-5/8-11 UNC	7.50	8.35	4.49	7.87	1.00	10.60	n/a
B5121E500LL-C	5"	2.20	8-5/8-11 UNC	8.50	9.53	5.00	8.39	1.00	10.60	n/a
B5121E600LL-C	6"	2.20	8-5/8-11 UNC	9.50	11.02	5.47	8.90	1.00	10.60	n/a
B5121E800LL-C	8"	2.36	8-5/8-11 UNC	11.75	13.19	6.89	10.24	1.25	12.60	n/a
B5121E1000LL-G	10"	2.68	12-7/8-9 UNC	14.25	15.94	8.00	11.50	3.21	9.84	8.86
B5121E1200LL-G	12"	3.07	12-7/8-9 UNC	17.00	19.09	9.53	13.27	3.21	11.80	8.86

All dimensions are in inches unless otherwise noted. Engineering dimensions are available upon request.
Specifications are subject to change without notice.

Bradford™ Check Valves

Check Valve Selection

Product Specifications

Size range:
- ½" - 4" OD tube

Materials:
- G = 304 stainless steel
- R = 316L stainless steel

Finish:
- 3A sanitary finish ID and OD

Index

Spring Check Valves 215-216
Y-Ball Check Valves.....217-218
Air Blow Check Valves.....219-220
Air Relief Valves 221-222

Spring Check Valves

3A 58-00
1447

Product Specifications

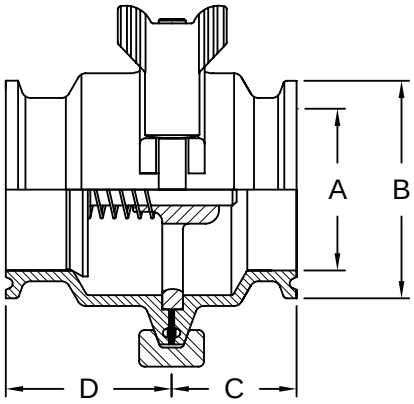

Features:

- 3A authorized 58-00
- full size flow plate
- long stem bushing for increased cycle life
- suitable for low and medium viscosity fluids
- field serviceable (no special tools required)
- various end connections available
- sizes from ½" thru 4"
- operating temperature range: **15°F** to **200°F**
- maximum operating pressure: **145 PSI**

Size	A	B	C	D	*316L Stainless Steel* Part Number	*316L Stainless Steel - all FKM* Part Number
½"	0.37	0.99	1.10	1.60	***B45MP-R50***	***B45MP-R50V***
¾"	0.62	0.99	1.10	1.60	***B45MP-R75***	***B45MP-R75V***
1"	0.87	1.99	1.37	1.92	***B46MP-R100***	***B46MP-R100V***
1½"	1.37	1.99	1.44	1.92	***B46MP-R150***	***B46MP-R150V***
2"	1.87	2.52	1.44	1.92	***B46MP-R200***	***B46MP-R200V***
2½"	2.37	3.05	1.44	1.92	***B46MP-R250***	***B46MP-R250V***
3"	2.87	3.58	1.44	1.92	***B46MP-R300***	***B46MP-R300V***
4"	3.84	4.69	1.88	2.15	***B46MP-R400***	***B46MP-R400V***

All dimensions are in inches unless otherwise noted. Engineering dimensions are available upon request.
Specifications are subject to change without notice.

repair kits

Size	Part Number
½"	***B45MP-RK050***
¾"	***B45MP-RK075***
1"	***B46MP-RK100***
1½"	***B46MP-RK150***
2"	***B46MP-RK200***
2½"	***B46MP-RK250***
3"	***B46MP-RK300***
4"	***B46MP-RK400***

Size	FKM Part Number
½"	***B45MP-RKV050***
¾"	***B45MP-RKV075***
1"	***B46MP-RKV100***
1½"	***B46MP-RKV150***
2"	***B46MP-RKV200***
2½"	***B46MP-RKV250***
3"	***B46MP-RKV300***
4"	***B46MP-RKV400***

Repair Kit contains:
½" - ¾"
(1) 316L stainless spring
(1) FKM stem seat
(1) Buna body O-ring
1" - 4"
(1) 316L stainless spring
(1) FKM stem seat
(1) Buna clamp gasket

FKM Repair Kit contains:
½" - ¾"
(1) 316L stainless spring
(1) FKM stem seat
(1) FKM body O-ring
1" - 4"
(1) 316L stainless spring
(1) FKM stem seat
(1) FKM clamp gasket

Spring Check Valves

Bill of Materials

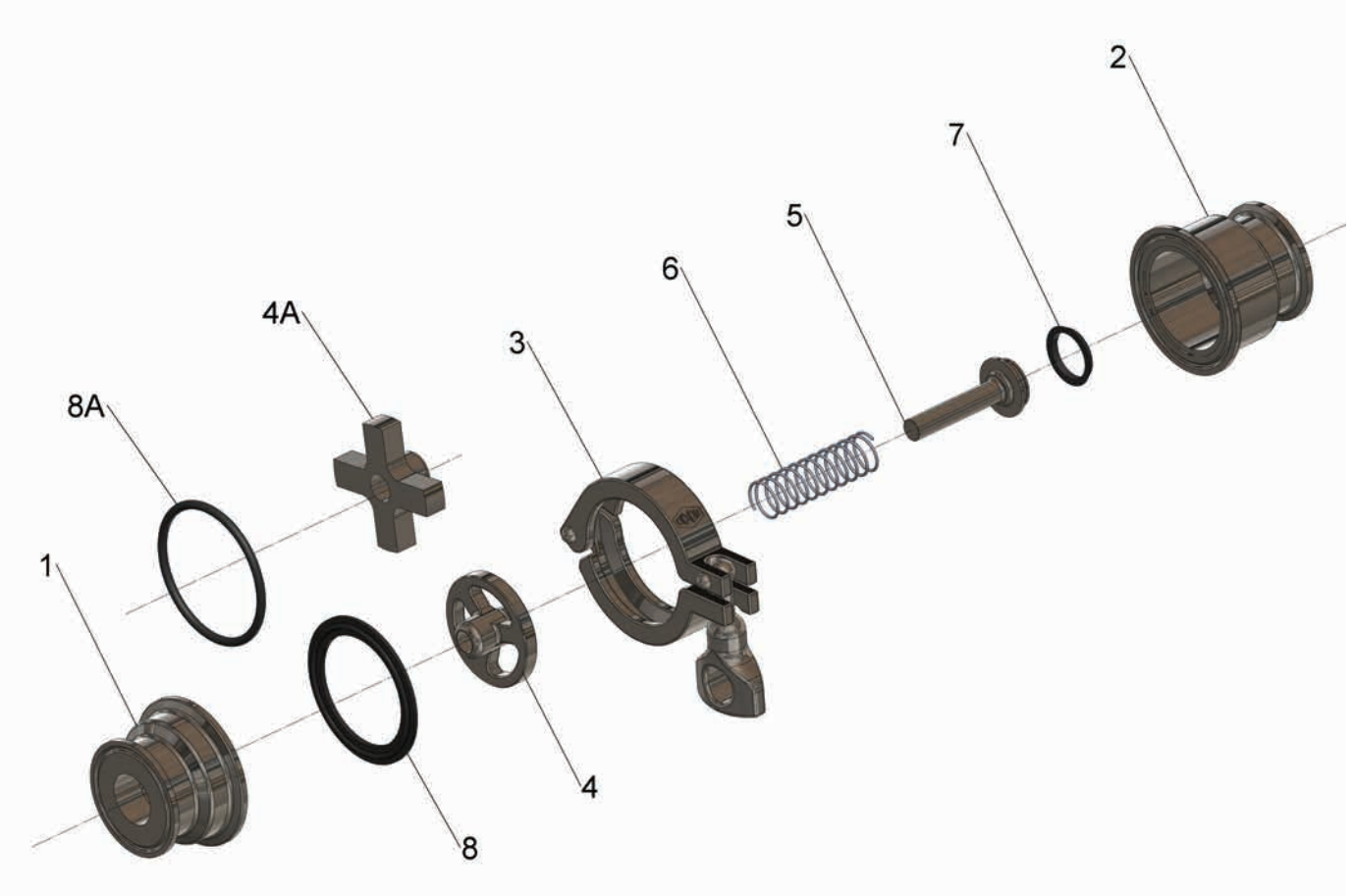

Item #	Description	Material	Quantity Required	
			½" - ¾"	1" - 4"
1	upper body housing	316L stainless	1	1
2	lower body housing	316L stainless	1	1
3	single pin clamp	CF8 stainless	1	1
4	flow plate	CF8M stainless	n/a	1
4A	flow plate	CF8M stainless	1	n/a
5	plunger	316L stainless	1	1
6	spring	316L stainless	1	1
7	stem seat	FKM	1	1
8	clamp gasket	Buna	n/a	1
8A	body O-ring	NBR (Buna)	1	n/a

Y - Ball Check Valves

1447

Product Specifications

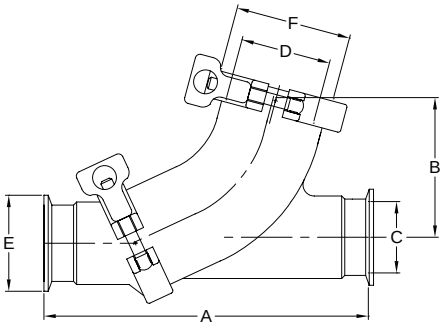

When liquid flows through the valve, the ball is forced into the branch of the valve allowing full fluid flow. When the liquid stops, equalizing the pressure, the ball drops back into the seat, preventing backflow. Should reverse flow occur, the differential pressure will cause the ball to seal firmly against the seat preventing leakage.

Features:

- 3A authorized 58-00
- two-piece construction
- replace seat instead of entire valve
- PTFE ball
- field serviceable (no special tools required)
- all metal product surfaces are 316L stainless steel construction
- operating temperature range: **15°F** to **200°F**
- maximum operating pressure: **150 PSI**

Valve Size	Clamp & Cap Size	A	B	C	D	E	F	Ball Diameter	Weight (lbs)	*316L Stainless Steel* Part Number
1½"	2"	7.50	3.30	1.36	1.87	1.98	2.51	1.6	4.9	***B45BY-R150***
2"	2½"	8.50	3.90	1.86	2.33	2.51	3.04	2.1	6.6	***B45BY-R200***
2½"	3"	10.00	4.50	2.37	2.87	3.04	3.57	2.7	10.5	***B45BY-R250***
3"	4"	11.50	5.30	2.87	3.83	3.57	4.68	3.6	17.5	***B45BY-R300***

All dimensions are in inches unless otherwise noted. Engineering dimensions are available upon request.
Specifications are subject to change without notice.

Repair and Seal Kits

Repair Kit contains:
(1) EPDM cap gasket
(1) PTFE ball
(1) EPDM/CF8M seat

Seal kit contains:
(1) EPDM cap gasket
(1) EPDM/CF8M seat

FKM Seal kit contains:
(1) FKM cap gasket
(1) FKM /CF8M seat

Size	*Repair Kit* Part Number	*Seal Kit* Part Number	*FKM Seal Kit* Part Number	*Replacement Ball Only* Part Number
1½"	***B45BY-RK150***	***B45BY-SK150***	***B45BY-SKV150***	***B45BY-TB150***
2"	***B45BY-RK200***	***B45BY-SK200***	***B45BY-SKV200***	***B45BY-TB200***
2½"	***B45BY-RK250***	***B45BY-SK250***	***B45BY-SKV250***	***B45BY-TB250***
3"	***B45BY-RK300***	***B45BY-SK300***	***B45BY-SKV300***	***B45BY-TB300***

Y-Ball Check Valves

Bill of Materials

Item #	Description	Material	Quantity
1	angle body	316L stainless	1
2	inlet body	316L stainless	1
3	single pin clamp	CF8 stainless	2
4	clamp end cap	316L stainless	1
5	cap gasket	EPDM	1
6	ball	PTFE	1
7	seat	EPDM/CF-8M stainless	1

Air Blow Check Valves

3A 58-00
1447

Product Specifications

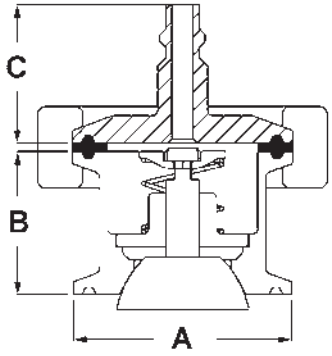

B45AB

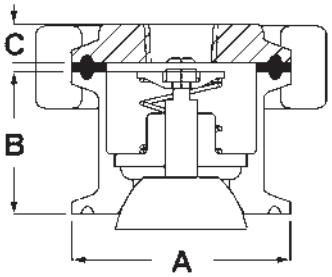

B45BC

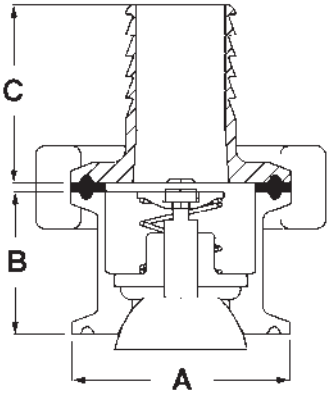

B45CC

Features:

- 3A authorized 58-00
- 316L stainless steel with EPDM stem seat and gasket
- maximum operating temperature: **212°F**
- maximum operating pressure: **145 PSI**

Size	A	B	*Quick-Connect Plug* Part Number	Dim. C	*Female NPT* Part Number	Dim. C	*Hose Barb* Part Number	Dim. C
1" - 1½"	1.984	1.30	***B45AB-R100150***	1.26	***B45BC-R100150***	0.6	***B45CC-R100150***	1.7
2"	2.516	1.30	***B45AB-R200***	1.26	***B45BC-R200***	0.6	***B45CC-R200***	1.7
2½"	3.047	1.30	***B45AB-R250***	1.26	***B45BC-R250***	0.6	***B45CC-R250***	1.7
3"	3.579	1.30	***B45AB-R300***	1.26	***B45BC-R300***	0.6	***B45CC-R300***	1.7
4"	4.682	1.30	***B45AB-R400***	1.26	***B45BC-R400***	0.6	***B45CC-R400***	1.7

All dimensions are in inches unless otherwise noted. Engineering dimensions are available upon request.
Specifications are subject to change without notice.

Repair Kit

repair kit, ***B45AB-RK***, contains:

(1) EPDM / 316L stainless perforated disc
(1) 304 stainless spring retainer
(1) 304 stainless spring
(1) nylon stem guide
(1) 316L / EPDM stem and plug

Sizing Chart

When using air blow check valves with ball check valves, refer to the sizing chart below.

Ball Check Valve size	Air Blow Check Valve size
1½"	2"
2"	2½"
2½"	3"
3"	4"

Air Blow Check Valves

Bill of Materials

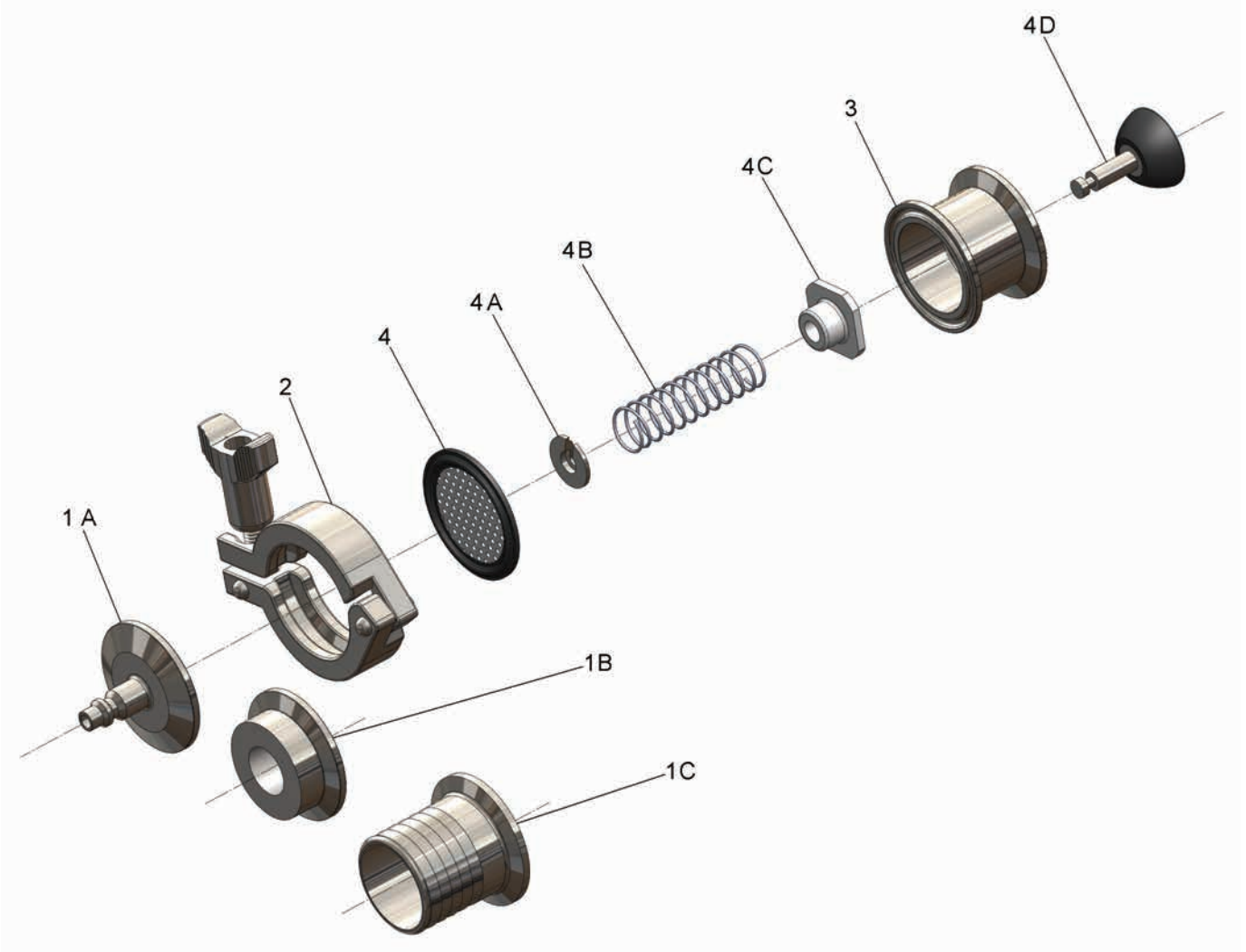

Item	Description	Material	Quantity
1A	¼" air line quick connect	316L	1
1B	½" NPT cap	316L	1
1C	1" hose barb	316L	1
2	single pin clamp	CF8	1
3	valve body	316L	1
4	perforated disc	EPDM/316L	1
4A	spring retainer	304	1
4B	spring	304	1
4C	stem guide	nylon	1
4D	stem and plug	316L/EPDM	1
Filter Discs (optional) *Must be used when installed in 3A applications*			
B45ABFD150	filter disc pack	1 micron filter	50

- filter discs (optional) must be used when installed for Accepted Practice 3A 604-05, Supplying Air under Pressure in Contact With Milk, Milk products and Product Contact.

Air Relief Valves

3A 58-00
1447

Product Specifications

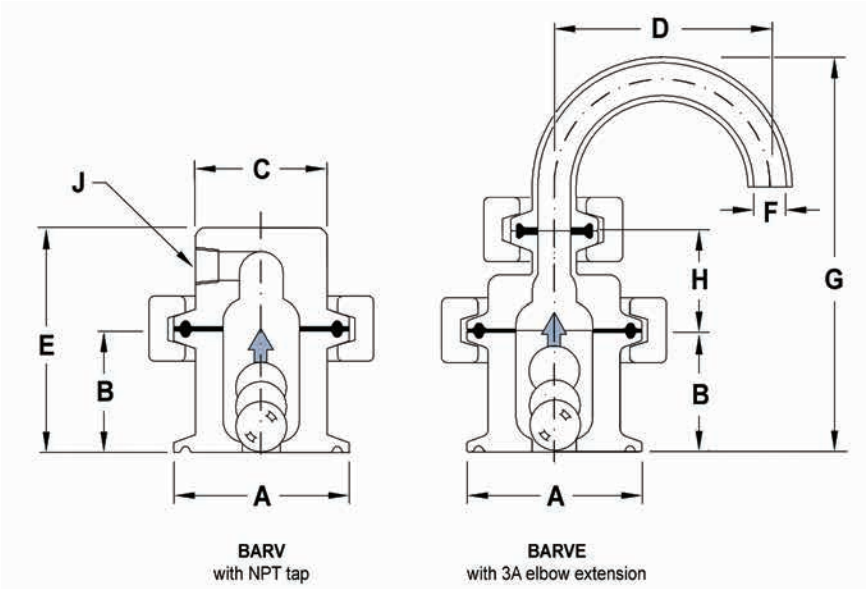

Features:

- 3A authorized 58-00
- no special tools required
- ball and gaskets are replaceable
- The valve seals for both pressure and vacuum.
- All product contact surfaces have a radius of ¼" or better.
- The valve ball is constructed of FDA, 3A approved polypropylene.
- PTFE valve ball is available
- other gasket materials available
- maximum operating temperature: **212°F**
- maximum PSI: **145**

Description	A	B	C	D	E	F	G	H	J	*304 Stainless Steel* Part Number
1½" air relief valve with tapped blind end	1.98	1.40	1.50	---	2.40	---	---	---	1/8" NPT	***BARV-G150***
2" air relief valve with tapped blind end	2.51	1.40	1.50	---	2.40	---	---	---	1/8" NPT	***BARV-G200***
1½" air relief valve with 180° elbow	1.98	1.40	---	1.50	---	0.37	4.50	1.10	---	***BARVE-G150*** 3A
2" air relief valve with 180° elbow	2.51	1.40	---	1.50	---	0.37	4.50	1.10	---	***BARVE-G200*** 3A

All dimensions are in inches unless otherwise noted. Engineering dimensions are available upon request.
Specifications are subject to change without notice.

Working Principle

The Bradford™ air relief valve allows air to be removed from a line or container without the liquid flowing out. Its design does not allow air to enter the line or container, even if subjected to a negative pressure. It is a double-seated valve with a freely moving polypropylene ball. The ball, which is lighter than water, closes against the upper or lower seat, depending on the pressure conditions.

Applications

1. Bleeding of a tube line where an air pocket has formed. This application calls for installation at the top of the tube.
2. Bleeding of a tube on the suction side of a pump. The suction side is bled automatically, before the pump starts, establishing a vacuum. Binding of air to liquid will be prevented, and so will subsequent cavitation. In this application the valve is mounted in front of the pump, on the top of the inlet tube.

Air Relief Valves

Bill of Materials

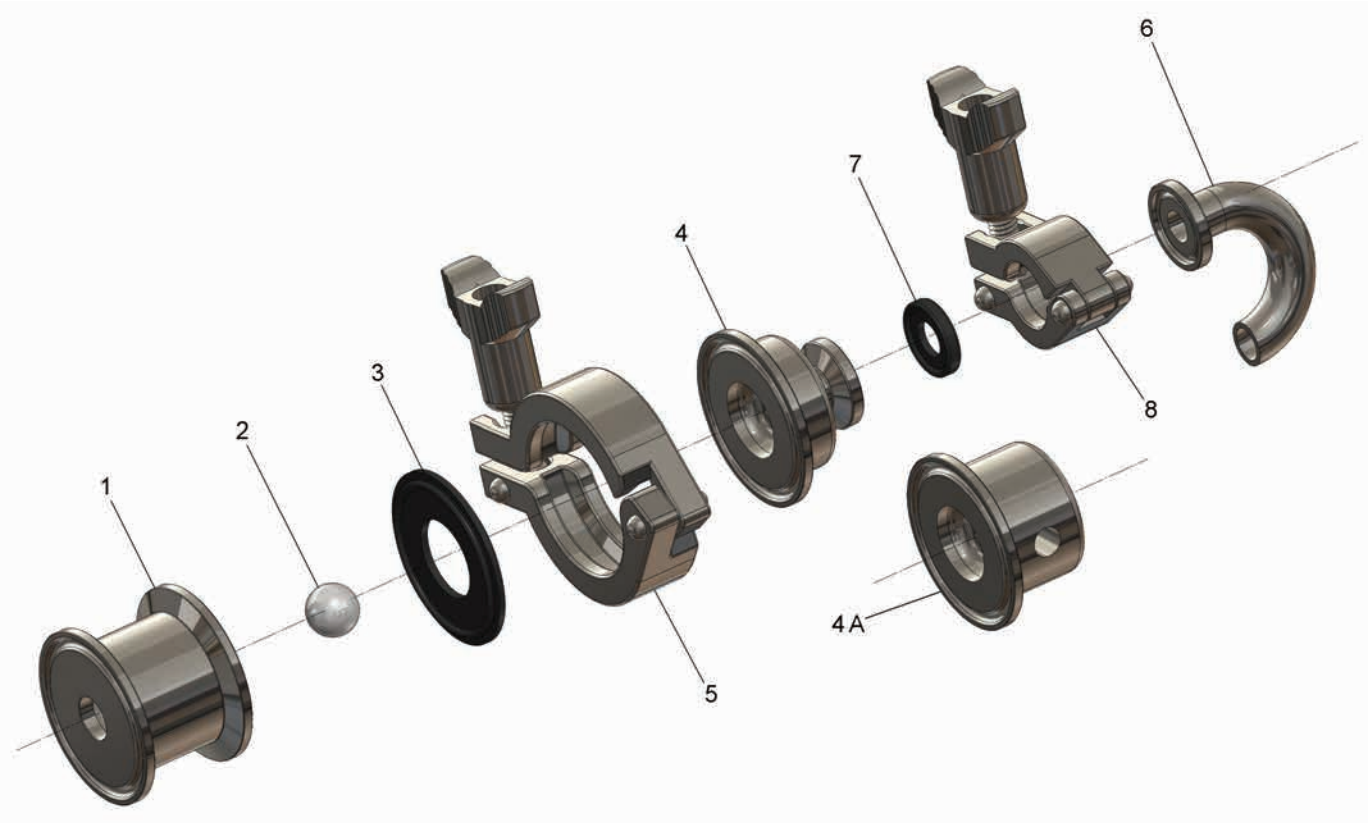

Item #	Description	Material	Quantity Required	
			elbow	tapped
1	body	304 stainless	1	1
2	ball	polypropylene	1	1
3	gasket	EPDM	1	1
4	3A cover	304 stainless	1	n/a
4A	tapped cover	304 stainless	n/a	1
5	1½" clamp	CF8 stainless	1	1
6	180° tube ferrule	304 stainless	1	n/a
7	½" gasket	EPDM	1	n/a
8	½" clamp	CF8 stainless	1	n/a

Replacement Parts

Part Number	Description	Material	Quantity Required
BARVE3P-G150	ball	polypropylene	1
BARVE3T-G150	ball	PTFE	1

Bradford™ Sample Valves

Product Specifications

Sample Valve Selection

Size range:
- ½" - 4" OD tube

Materials:
- G = 304 stainless steel
- R = 316L stainless steel

Finish:
- 3A sanitary finish ID and OD

Index

Angle Sample Valve 223-224
Inline Sample Valve 225-226
W Series Sample Valve 227-228
Topping Gun 229

Angle Sample Valves - *BSVACV*

Features:
- all 316L stainless wetted part construction
- standard finish to 20 R_a ID / 32 R_a OD
- FKM O-ring
- fully traceable (material test reports)
- virgin PTFE seat for positive closure
- minimal internal dead-leg area
- sizes available: ½" thru 4"
- temperature rating: **300°F** at **200 PSI**

Right Angle Sample Valve Dimensions

Valve Size	A	B	BarbØ C	D	FerruleØ E	Part Number
1/2"	0.93	0.21	1/4"	1.76	0.99	***BSVACV-N050025***
1/2"	0.92	0.28	3/8"	1.78	0.99	***BSVACV-N050375***
1/2"	0.85	0.37	1/2"	1.76	0.99	***BSVACV-N050050***
3/4"	0.93	0.21	1/4"	1.76	0.99	***BSVACV-N075025***
3/4"	0.92	0.28	3/8"	1.78	0.99	***BSVACV-N075375***
3/4"	0.85	0.37	1/2"	1.76	0.99	***BSVACV-N075050***
1"	0.96	0.21	1/4"	2.04	1.98	***BSVACV-N100025***
1"	0.95	0.28	3/8"	2.03	1.98	***BSVACV-N100375***
1"	0.88	0.37	1/2"	2.03	1.98	***BSVACV-N100050***
1 1/2"	0.96	0.21	1/4"	2.04	1.98	***BSVACV-N150025***
1 1/2"	0.95	0.28	3/8"	2.03	1.98	***BSVACV-N150375***
1 1/2"	0.88	0.37	1/2"	2.03	1.98	***BSVACV-N150050***
2"	0.96	0.21	1/4"	2.31	2.52	***BSVACV-N200025***
2"	0.95	0.28	3/8"	2.31	2.52	***BSVACV-N200375***
2"	0.88	0.37	1/2"	2.29	2.52	***BSVACV-N200050***
2 1/2"	0.96	0.21	1/4"	2.57	3.05	***BSVACV-N250025***
2 1/2"	0.95	0.28	3/8"	2.57	3.05	***BSVACV-N250375***
2 1/2"	0.88	0.37	1/2"	2.56	3.05	***BSVACV-N250050***
3"	0.96	0.21	1/4"	2.84	3.58	***BSVACV-N300025***
3"	0.95	0.28	3/8"	2.37	3.58	***BSVACV-N300375***
3"	0.88	0.37	1/2"	2.83	3.58	***BSVACV-N300050***
4"	0.96	0.21	1/4"	3.39	4.68	***BSVACV-N400025***
4"	0.95	0.28	3/8"	3.39	4.68	***BSVACV-N400375***
4"	0.88	0.37	1/2"	3.38	4.68	***BSVACV-N400050***

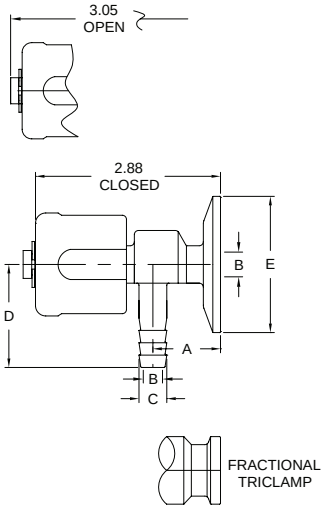

All dimensions are in inches unless otherwise noted. Engineering dimensions are available upon request.
Specifications are subject to change without notice.

Sample Valves

Angle Sample Valves - *BSVACV*
Bill of Materials

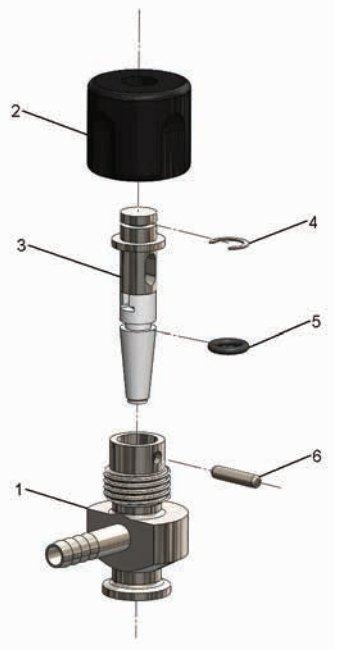

Item #	Description	Material	Quantity
1	body	316L stainless steel	1
2	knob	ULTEM (FDA)	1
3	stem	316L stainless / PTFE	1
4	E-clip	304 stainless steel	1
5	O-ring	FKM	1
6	body pin	316L stainless steel	1

repair kits

Size	Part Number
1/4"	***BSVA-NRKS025***
3/8"	***BSVA-NRKS038***
1/2"	***BSVA-NRKS050***

Repair Kit contains:
(1) PTFE seat
(1) FKM O-ring
(1) 316 stainless steel stop pin
(1) 304 stainless steel E-clip

Sample Valves

Inline Sample Valves - *BSVICV*

Features:
- all 316L stainless wetted part construction
- standard finish to 20 R_a ID / 32 R_a OD
- FKM O-ring
- fully traceable (material test reports)
- virgin PTFE seat for positive closure
- minimal internal dead-leg area
- sizes available: ½" thru 4"
- temperature rating: **300°F** at **200 PSI**

Inline Sample Valve Dimensions

Valve Size	Barb A	Ferrule B	Part Number
1/2"	1/4"	0.99	***BSVICV-N050025***
1/2"	3/8"	0.99	***BSVICV-N050375***
1/2"	1/2"	0.99	***BSVICV-N050050***
3/4"	1/4"	0.99	***BSVICV-N075025***
3/4"	3/8"	0.99	***BSVICV-N075375***
3/4"	1/2"	0.99	***BSVICV-N075050***
1"	1/4"	1.98	***BSVICV-N100025***
1"	3/8"	1.98	***BSVICV-N100375***
1"	1/2"	1.98	***BSVICV-N100050***
1-1/2"	1/4"	1.98	***BSVICV-N150025***
1-1/2"	3/8"	1.98	***BSVICV-N150375***
1-1/2"	1/2"	1.98	***BSVICV-N150050***
2"	1/4"	2.52	***BSVICV-N200025***
2"	3/8"	2.52	***BSVICV-N200375***
2"	1/2"	2.52	***BSVICV-N200050***
2-1/2"	1/4"	3.05	***BSVICV-N250025***
2-1/2"	3/8"	3.05	***BSVICV-N250375***
2-1/2"	1/2"	3.05	***BSVICV-N250050***
3"	1/4"	3.58	***BSVICV-N300025***
3"	3/8"	3.58	***BSVICV-N300375***
3"	1/2"	3.58	***BSVICV-N300050***
4"	1/4"	4.68	***BSVICV-N400025***
4"	3/8"	4.68	***BSVICV-N400375***
4"	1/2"	4.68	***BSVICV-N400050***

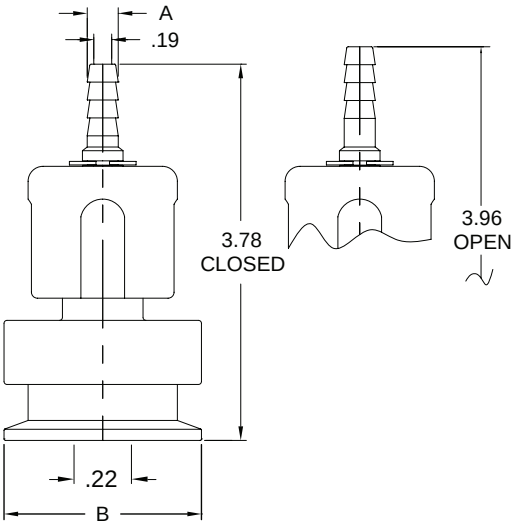

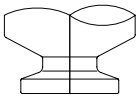

FRACTIONAL
TRICLAMP

All dimensions are in inches unless otherwise noted. Engineering dimensions are available upon request.
Specifications are subject to change without notice.

Sample Valves

Inline Sample Valves - *BSVICV*
Bill of Materials

Item #	Description	Material	Quantity
1	body	316L stainless steel	1
2	knob	ULTEM (FDA)	1
3	stem	316L stainless / PTFE	1
4	E-clip	304 stainless steel	1
5	O-ring	FKM	1
6	body pin	316L stainless steel	1

repair kits

Size	Part Number
1/4"	***BSVI-NRKS025***
3/8"	***BSVI-NRKS038***
1/2"	***BSVI-NRKS050***

Repair Kit contains:
- (1) stem assembly
- (1) FKM O-ring
- (1) 316 stainless steel stop pin
- (1) 304 stainless steel E-clip

Sample Valves

W Series Sample Valves - *BSVW*S*

Features:
- 304 stainless steel
- double silicone O-rings
- silicone or PTFE seat ensures a leak-proof shut-off
- surface finish polished to sanitary standards
- temperature rating: **300°F** at **200 PSI**

Size	Style	Seat Material	Weight (lbs)	*304 Stainless Steel* Part Number
3/8"	NPT	silicone	0.72	***BSVWNS-G375***
3/8"	NPT	PTFE	0.72	***BSVWNP-G375***
1"	clamp	silicone	0.88	***BSVWCS-G100***
1"	clamp	PTFE	0.88	***BSVWCP-G100***
1"	butt-weld	silicone	0.72	***BSVWBS-G100***
1"	butt-weld	PTFE	0.72	***BSVWBP-G100***

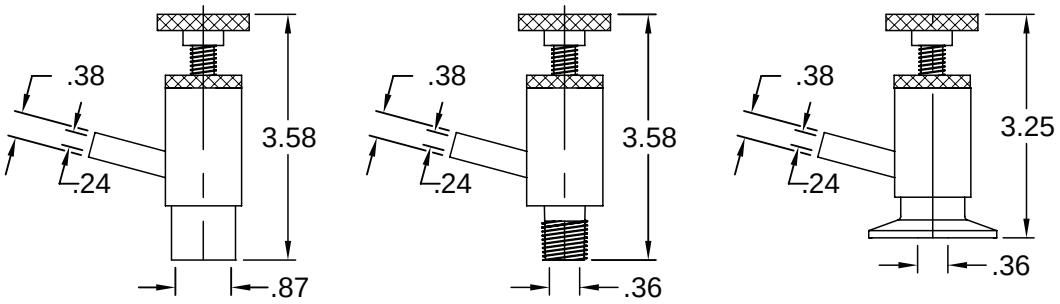

BUTTWELD STYLE

NPT STYLE

CLAMP STYLE

ALL VALVES ARE SHOWN FULLY OPEN

All dimensions are in inches unless otherwise noted. Engineering dimensions are available upon request. Specifications are subject to change without notice.

Sample Valves

W Series Sample Valves - *BSVW*S*
Bill of Materials

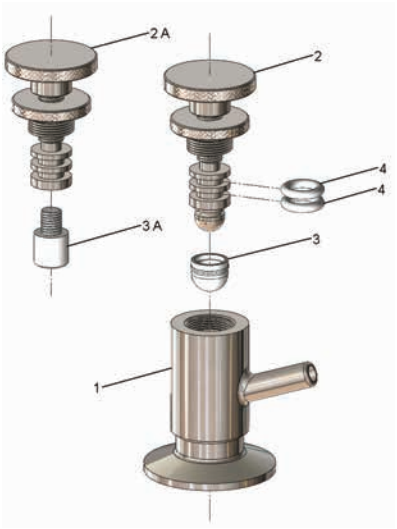

clamp

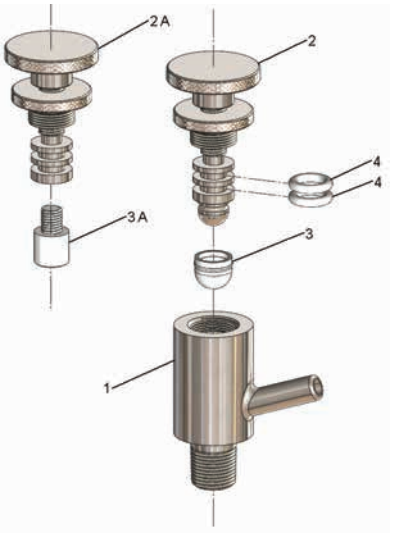

NPT

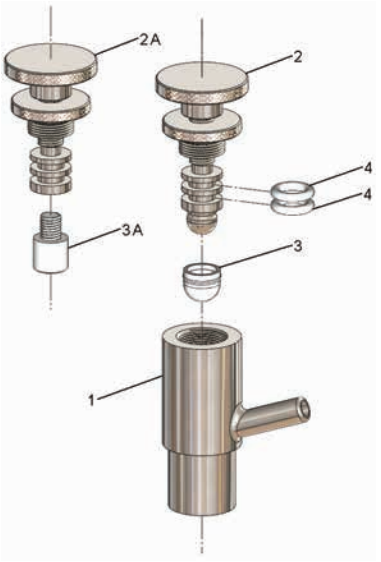

weld

Item #	Description	Material	Quantity
1	body - clamp	304 stainless steel	1
1	body - NPT	304 stainless steel	1
1	body - weld	304 stainless steel	1
2	knob / stem assembly	304 stainless steel	1
2A	knob / stem assembly	304 stainless steel	1
3	seat	silicone	1
3A	seat	PTFE	1
4	O-rings	silicone	2

repair kits

BSVW-RKS Repair Kit contains:
(2) silicone O-rings
(1) silicone seat

BSVW-RKP Repair Kit contains:
(2) silicone O-rings
(1) PTFE seat

Topping Gun

Topping Gun - *BTG*

Features:
- all 304 stainless steel construction
- ½" female NPT inlet
- ½" OD tube outlet
- squeeze handle for easy opening and control
- spring loaded trigger for positive shutoff
- EPDM seals and gaskets

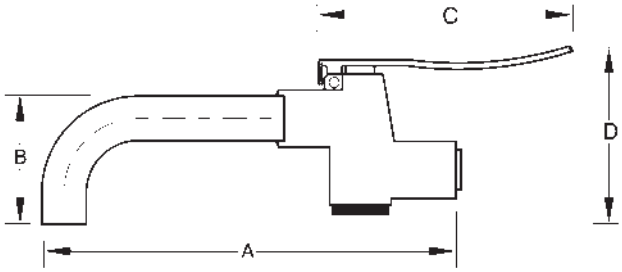

A	B	C	D	Part Number
8.094	3.375	4.750	4.563	***BTG-G50***

All dimensions are in inches unless otherwise noted. Engineering dimensions are available upon request.
Specifications are subject to change without notice.

Sanitary Gaskets

Elastomers available:

- Nitrile (Buna N)
- Silicone (peroxide cured)
- EPDM
- FKM
- PTFE
- Screens and orifice gaskets (see page 231 for mesh sizes)
- PTFE orifice gaskets are solid PTFE

Certified as required to:

- US Pharmacopoeia Class VI Cytotoxicity Criteria
- Title 21CFR177.2600 & .1550
- USDA and 3A Sanitary Standards

All elastomeric gaskets require periodic replacement. Gasket life is influenced by the gasket material, product application, temperature, cleaning procedures, etc. After monitoring gasket conditions in a process system, a schedule should be developed for replacement of gaskets.

Color Coding - Identification of Gasket Materials

Elastomer	Part Number Identifier	Typical Color	Color Code	Useful Temperature
Buna-N	U	black	1 red dot	-25°F to 225°F
Buna-N	UW	white	1 red dot	-25°F to 225°F
EPDM sulfur cured	E	black	1 green dot	-40°F to 275°F
EPDM peroxide cured	E	black	3 green dots	-40°F to 275°F
FKM	SFY	black or brown	1 white dot 1 yellow dot	-15°F to 375°F
Silicone peroxide cured	XW	white	1 pink dot	-50°F to 400°F
Silicone peroxide cured	XC	clear	none	-50°F to 400°F
PTFE	G	white	none	-10°F to 300°F
PTFE w/50% 316 particles	GTS	silver	none	-20°F to 450°F

Packaging and Storing Information

The shelf life of rubber gaskets is the maximum period from cure date to the date the product is installed. During the shelf life time, the rubber product is expected to retain its characteristics under the following conditions:

- stored in original packaging in a clean, dry warehouse
- not exposed to direct sunlight
- stored no closer than 6 feet from electric motors
- temperature between 65°F to 85°F

A guideline for shelf life of rubber gaskets manufactured from the following components should have the following shelf life not to exceed:

- Buna 10 years
- EPDM 10 years
- FKM 10 years
- Silicone 5 years
- PTFE 20 years

Particulate Reference Chart

316 Square Mesh Wire Cloth Information

- Special order parts, minimum order quantities required

Mesh	Micron Equivalent	Opening Width	Wire Diameter	Openings per Square Inch
4	5400	.215	.035	16
6	3221	.132	.035	36
8	2441	.097	.028	64
9	2089	.083	.025	81
10 [1]	1887	.075	.023	100
12	1510	.050	.023	144
14 [2]	1283	.051	.020	196
16	1082	.0455	.016	256
20	855	.034	.016	400
30	427	.017	.016	900
35	422	.0168	.0118	1275
40	377	.015	.010	1600
50	276	.011	.009	2500
60	226	.009	.0075	3600
80	176	.007	.0055	6400
100 [3]	151	.006	.0045	10,000
120 [3]	120	.0048	.0035	14,400
150 [3]	103	.0041	.0026	22,500
200 [3]	73	.0029	.0021	40,000

[1] Standard size for clamp style gaskets
[2] Standard size for bevel seat size gaskets
[3] Available in only 1", 1½" and 2" sizes

Perforated 316 Disc Information

- 1 micron = .00003973 inches
- Special order - minimums apply

Hole Diameter	Micron Equivalent	Open Area
.020"	503	30%
.033" [1]	803	28%
.063"	1573	23%
.100"	2517	33%
.125"	3146	40%
.250"	6350	58%

[1] Standard size for clamp style

Clamp Fittings and Gasket Sizing Guide

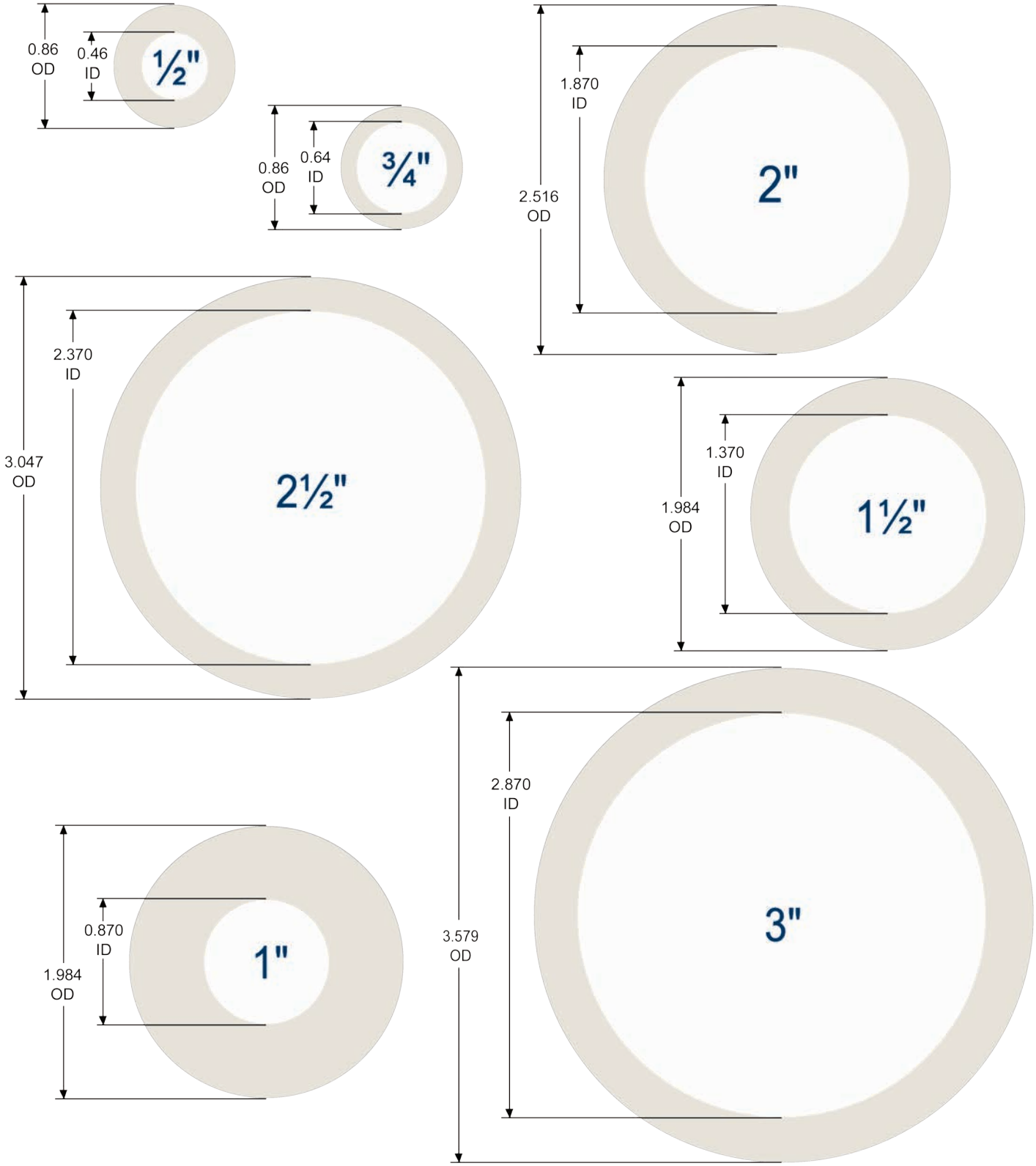

Sanitary Size	OD of Clamp End	ID of Fitting
½"	0.992	0.370
¾"	0.992	0.620
1"	1.984	0.870
1½"	1.984	1.370
2"	2.516	1.870
2½"	3.047	2.370

Sanitary Size	OD of Clamp End	ID of Fitting
3"	3.579	2.870
4"	4.682	3.834
6"	6.562	5.782
8"	8.602	7.782
10"	10.570	9.782
12"	12.570	11.760

Clamp Fittings and Gasket Sizing Guide

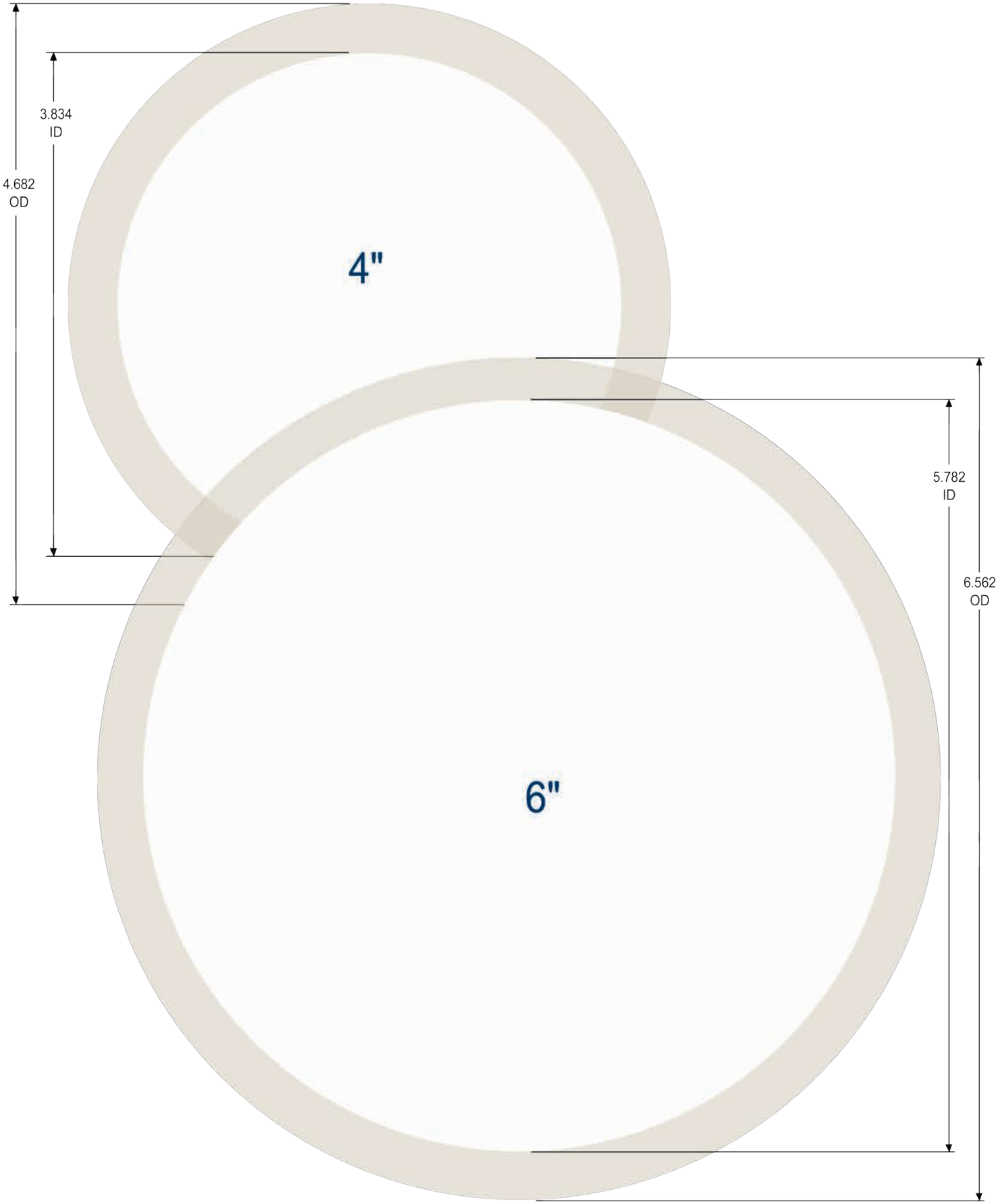

A Guideline for Compound Selection for Use with Various Fluids and Chemicals

Note: The information contained in these tables was derived from several sources and is to be used as a general guide only. Compounds suitable for any specific application rests solely by the end user. Dixon Sanitary assumes no responsibility. All effect ratings assume static conditions at ambient temperatures.

A - satisfactory
B - fair
C - severe effect; except for some static applications
D - unsatisfactory
E - insufficient information

fluid	material				
	Buna	*EPDM*	*FKM*	PTFE	*Silicone*
Acetaldehyde	D	A	D	A	B
Acetamide	A	A	B	A	B
Acetic Acid, 30%	B	A	B	A	A
Acetone	D	A	D	A	C
Acetophenone	D	A	D	A	D
Acetyl Chloride	D	D	A	A	C
Acetylene	A	A	A	A	B
Acrylonitrile	D	D	C	A	D
Adipic Acid	A	A	E	E	E
Ammonia Gas (cold)	A	A	D	A	A
Ammonium Choride (aq)	A	A	A	A	E
Ammonium Hydroxide (conc.)	D	A	B	A	A
Ammonium Nitrate (aq)	A	A	E	A	E
Ammonium Nitrite (aq)	A	A	E	E	B
Ammonium Phospate (aq)	A	A	E	A	A
Ammonium Sulfate (aq)	A	A	D	A	E
Amyl Acetate (Banana Oil)	D	A	D	A	D
Amyl Alcohol	B	A	B	A	D
Amyl Borate	A	D	A	A	E
Arsenic Acid	A	A	A	E	A
Arsenic Trichloride (aq)	A	C	E	E	E
Barium Chloride (aq)	A	A	A	A	A
Barium Hydroxide (aq)	A	A	A	A	A
Barium Sulfate (aq)	A	A	A	A	A
Barium Sulfide (aq)	A	A	A	A	A
Benzaldehyde	D	A	D	A	B
Benzene	D	D	A	A	D
Benzoic Acid	C	C	A	A	C
Benzoyl Chloride	D	D	A	A	E
Benzyl Alcohol	D	A	A	A	B
Benzyl Chloride	D	D	A	A	D
Boric Acid	A	A	A	A	A
Brine	A	A	A	A	A
Bromine, Anhydrous	D	D	A	E	D
Bromine Water	D	B	A	E	D
Butadiene	D	C	A	A	D
Butane	A	D	A	A	D
Butyl Acetate	D	C	D	E	D

fluid	material				
	Buna	*EPDM*	*FKM*	PTFE	*Silicone*
Butyl Acetyl Ricinoleate	C	A	A	E	E
Butyl Alcohol	A	B	A	A	B
Butyl Amine	C	B	D	E	D
Butyl Benzoate	D	B	A	E	E
Butyl Carbitol	D	A	A	A	D
Butyl Cellosoive	D	A	D	A	E
Butyl Oleate	D	B	A	E	E
Butyl Stearate	B	C	A	E	E
Butylene	B	D	A	E	D
Butyraldehyde	D	B	D	E	D
Carbolic Acid (Phenol)	D	B	A	A	D
Carbon Bisulfide	C	D	A	E	D
Carbon Dioxide	A	B	A	E	B
Carbonic Acid	B	A	A	E	A
Carbon Monoxide	A	A	A	A	A
Carbon Tetrachloride	C	D	A	A	D
Castor Oil	A	B	A	A	A
Cellosoive Acetate	D	B	D	A	D
China Wood Oil (Tung Oil)	A	C	A	A	D
Chlorine (wet)	D	C	A	A	D
Chlorine Dioxide	D	C	A	A	E
Chloroacetic Acid	D	A	D	A	E
Chloroacetone	D	A	D	E	D
Chlorobenzene	D	D	A	E	D
Chlorobromomethane	D	B	A	E	D
Chloroform	D	D	A	A	D
Chlorotoluene	D	D	A	E	D
Chrome Plating Solutions	D	C	A	A	C
Chromic Acid	D	B	A	A	B
Cod Liver Oil	A	A	A	A	B
Copper Acetate (aq)	B	A	D	E	D
Copper Chloride (aq)	A	A	A	A	A
Copper Cyanide (aq)	A	A	A	A	A
Copper Sulfate (aq)	A	A	A	A	A
Creosote (coal tar)	A	D	A	A	D
Cresylic Acid	D	D	A	E	D
Cyclohexane	A	D	A	A	D
Cyclohexanol	C	C	A	E	D

fluid	material				
	Buna	*EPDM*	*FKM*	PTFE	*Silicone*
Cyclohexanone	D	B	D	E	D
Denatured Alcohol	A	A	A	A	A
Detergent Solutions	A	A	A	A	A
Diacetone Alcohol	D	A	D	A	B
Dibenzyl Ether	D	B	D	A	E
Dibenzyl Sebecate	D	B	B	E	C
Dibromoethyl Benzene (Alkazene)	D	D	B	E	D
Dibutyl Amine	D	C	D	E	C
Dibutyl Ether	D	C	C	E	D
Dibutyl Phthalate	D	B	C	A	B
Dibutyl Sebecate	D	B	B	E	B
O-Dichlorobenzene	D	D	A	E	D
Dichloro-Isopropyl Ether	D	C	C	E	D
Diethylamine	B	B	D	A	B
Diethyl Benzene	D	D	A	E	D
Diethyl Ether	D	D	D	E	D
Diethylene Glycol	A	A	A	E	B
Diethyl Sebecate	B	B	B	E	B
Diisobutylene	B	D	A	E	D
Diisopropyl Benzene	D	D	A	E	E
Diisopropyl Ketone	D	A	D	E	D
Diisopropylidence Acetone	D	C	D	E	D
Dimethyl Aniline (Xylidine)	C	B	D	E	D
Dimethyl Ether (Methyl Ether)	A	D	A	E	A
Dimethyl Formamide	B	B	D	E	B
Dimethyl Phthalate	D	B	B	E	E
Dinitrotoluene	D	D	D	E	D
Dioctyl Phthalate	C	B	B	E	C
Dioctyl Sebecate	D	B	B	E	C
Dioxane	D	B	D	E	D
Dioxolane	D	B	D	E	D
Dipentene	A	D	A	E	D
Diphenyl (Phenylbenzene)	D	D	A	E	D
Diphenyl Oxides	D	D	A	E	C
Dowtherm Oil	D	D	A	A	C
Ethane	A	D	A	A	D
Ethanolamine	B	B	D	E	B
Ethyl Acetate	D	B	D	E	B
Ethyl Acetoacetate	D	B	D	E	B
Ethyl Acrylate	D	B	D	E	B
Ethyl Alcohol	A	A	C	A	A
Ethyl Benzene	D	D	A	A	D
Ethyl Benzoate	D	A	A	A	D
Ethyl Cellosoive	D	B	D	E	D
Ethyl Cellulose	B	B	D	A	C
Ethyl Chloride	A	C	A	A	D

fluid	material				
	Buna	*EPDM*	*FKM*	PTFE	*Silicone*
Ethyl Chlorocarbonate	D	B	A	A	D
Ethyl Chloroformate	D	B	D	E	D
Ethyl Ether	C	C	D	A	D
Ethyl Pentachlorobenzene	D	D	A	A	D
Ethylene	A	B	A	A	E
Ethylene Chloride	D	C	B	E	D
Ethylene Diamine	A	A	D	E	A
Ethylene Dichloride	D	C	A	A	D
Ethylene Glycol	A	A	A	A	A
Fluoroboric Acid	A	A	E	E	E
Freon 11	B	D	A	A	D
Freon 12	A	B	B	A	D
Freon 22	D	A	D	A	D
Fumaric Acid	A	B	A	E	B
Gallic Acid	B	B	A	A	E
Gasoline	B	D	A	A	D
Glucose	A	A	A	A	A
Glycerin	A	A	A	A	A
Hexane	A	D	A	A	D
Hexyl Alcohol	A	C	A	A	B
Hydrazine	B	A	D	A	C
Hydrobromic Acid	D	A	A	E	D
Hydrocyanic Acid	B	A	A	A	C
Hydrofluoric Acid (conc.) cold	D	C	A	A	D
Hydrofluosilicic Acid	B	B	A	E	D
Hydrogen Gas	A	A	A	A	C
Hydrogen Peroxide (90%)	D	B	B	E	B
Hydrogen Sulfide (wet) cold	D	A	D	E	C
Hydroquinone	C	B	B	A	E
Iodoform	E	D	E	E	E
Isobutyl Alcohol	B	A	A	A	A
Isooctane	A	D	A	E	D
Isopropyl Acetate	D	B	D	A	D
Isopropyl Alcohol	B	A	A	A	A
Isopropyl Chloride	D	D	A	A	D
Isopropyl Ether	B	D	D	A	D
Kerosene	A	D	A	A	D
Lacquers	D	D	D	A	D
Lactic Acid (cold)	A	A	A	A	A
Lead Acetate (aq)	B	A	D	E	D
Lead Nitrite (aq)	A	A	E	E	B
Lime Bleach	A	A	A	E	B
Linoleic Acid	B	D	B	A	B
Maleic Acid	D	B	A	A	E
Malic Acid	A	B	A	E	B
Methane	A	D	B	A	D
Methyl Acetate	D	A	D	A	D

fluid	material				
	Buna	*EPDM*	*FKM*	PTFE	*Silicone*
Methyl Acrylate	D	B	D	A	D
Methylacrylic Acid	D	B	D	E	D
Methyl Alcohol	A	A	D	A	A
Methyl Bromide	B	D	A	A	E
Methyl Butyl Ketone	D	A	D	A	C
Methyl Cellosoive	C	B	D	A	D
Methyl Chloride	D	C	B	A	D
Methyl Cyclopentane	D	D	B	E	D
Methylene Chloride	D	C	B	E	D
Methyl Ether	A	D	A	A	A
Methyl Ethyl Ketone	D	A	D	A	D
Methyl Isobutyl Ketone	D	B	D	A	D
Methyl Methacrylate	D	C	D	A	D
Milk	A	A	A	A	A
Mineral Oil	A	C	A	C	B
Monoethanol Amine	D	A	D	E	B
Monomethyl Ether	A	D	A	E	A
Monovinyl Acetylene	A	A	A	A	B
Mustard Gas	E	A	E	E	A
Naphthalenic Acid	B	D	A	A	D
Natural Gas	A	D	A	A	A
Nickel Acetate (aq)	B	A	D	E	D
Nickel Chloride (aq)	A	A	A	A	A
Nickel Sulfate (aq)	A	A	A	A	A
Nitric Acid (dilute)	D	B	A	A	B
Nitrobenzene (Ligroin)	A	D	A	A	D
Nitroethane	D	B	D	A	D
Nitrogen Tetroxide	D	C	D	A	D
Octachlorotoluene	D	D	A	E	D
Octadecane	A	D	A	E	D
N-Octane	B	D	A	A	D
Octyl Alcohol	B	C	A	A	B
Oleic Acid	C	D	B	A	D
Oxalic Acid	B	A	A	E	B
Oxonia	D	A	A	E	A
Oxygen - Cold	B	A	A	A	A
Ozone	D	A	A	E	A
Palmitic Acid	A	B	A	E	D
Perchloric Acid	D	B	A	E	D
Phenyl Ethyl Ether	D	D	D	E	D
Phosphoric Acid - 20%	B	A	A	E	B
Phosphorus Trichloride	D	A	A	A	E
Piperidine	D	A	D	E	D
Polyvinyl Acetate Emulsion	E	A	E	E	E
Potassium Acetate (aq)	B	A	D	E	D
Potassium Chloride (aq)	A	A	A	A	A
Potassium Cyanide (aq)	A	A	A	A	A

fluid	material				
	Buna	*EPDM*	*FKM*	PTFE	*Silicone*
Potassium Nitrate (aq)	A	A	A	A	A
i-Propyl Acetate	D	B	D	E	D
Propyl Nitrate	D	B	D	E	D
Propylene	D	D	A	A	D
Pyridine	D	B	D	E	D
Salicylic Acid	B	A	A	E	E
Silicone Oils	A	A	A	A	C
Soap Solutions	A	A	A	A	A
Sodium Acetate (aq)	B	A	D	E	D
Sodium Bicarbonate (aq)	A	A	A	A	A
Sodium Borate (aq)	A	A	A	A	A
Sodium Chloride (aq)	A	A	A	A	A
Sodium Hydroxide (aq)	B	A	B	A	B
Sodium Nitrate (aq)	B	A	E	E	D
Sodium Peroxide (aq)	B	A	A	E	D
Soybean Oil	A	C	A	A	A
Steam, under 300°F	D	A	D	A	C
Stearic Acid	B	B	E	A	B
Stoddard Solvent	A	D	A	A	D
Sulfur Chloride (aq)	C	D	A	B	C
Sulfuric Acid (dilute)	C	B	A	E	D
Sulfurous Acid	B	B	A	A	D
Tannic Acid	A	A	A	A	B
Tartaric Acid	A	B	A	A	A
Tetrachloroethylene	D	D	A	A	D
Toluene	D	D	A	A	D
Triethanol Amine	B	A	D	A	E
Trioctyl Phosphate	D	A	B	E	C
Tung Oil (China Wood Oil)	A	C	A	A	D
Turpentine	A	D	A	A	D
Vegetable Oils	A	C	A	A	B
Vinegar	B	A	A	A	A
Whiskey, Wines	A	A	A	A	A
White Pine Oil	B	D	A	E	D
Zinc Chloride (aq)	A	A	A	A	A

Fraction - Decimal Conversion Chart

		Inches	Millimeters
	1/64	.015625	.3969
1/32		.03125	.7938
	3/64	.046875	1.1906
1/16		.0625	1.5875
	5/64	.078125	1.9844
3/32		.09375	2.3813
	7/64	.109375	2.7781
1/8		.125	3.1750
	9/64	.140625	3.5719
5/32		.15625	3.9688
	11/64	.171875	4.3656
3/16		.1875	4.7625
	13/64	.203125	5.1594
7/32		.21875	5.5563
	15/64	.234375	5.9531
1/4		.250	6.3500
	17/64	.265625	6.7469
9/32		.28125	7.1438
	19/64	.296875	7.5406
5/16		.3125	7.9375
	21/64	.328125	8.3344
11/32		.34375	8.7313
	23/64	.359375	9.1282
3/8		.375	9.5250
	25/64	.390625	9.9219
13/32		.40625	10.3188
	27/64	.421875	10.7157
7/16		.4375	11.1125
	29/64	.453125	11.5094
15/32		.46875	11.9063
	31/64	.484375	12.3032
1/2		.500	12.7001

		Inches	Millimeters
	33/64	.515625	13.0969
17/32		.53125	13.4938
	35/64	.546875	13.8907
9/16		.5625	14.2876
	37/64	.578125	14.6844
19/32		.59375	15.0813
	39/64	.609375	15.4782
5/8		.625	15.8751
	41/64	.640625	16.2719
21/32		.65625	16.6688
	43/64	.671875	17.0657
11/16		.6875	17.4626
	45/64	.703125	17.8594
23/32		.71875	18.2563
	47/64	.734375	18.6532
3/4		.750	19.0501
	49/64	.765625	19.4470
25/32		.78125	19.8438
	51/64	.796875	20.2407
13/16		.8125	20.6376
	53/64	.828125	21.0345
27/32		.84375	21.4313
	55/64	.859375	21.8282
7/8		.875	22.2251
	57/64	.890625	22.6220
29/32		.90625	23.0188
	59/64	.921875	23.4157
15/16		.9375	23.8126
	61/64	.953125	24.2095
31/32		.96875	24.6063
	63/64	.984375	25.0032
1		1.000	25.4001

Temperature Conversions

Look up reading in middle column (shaded). If in degrees Centigrade, read Fahrenheit equivalent in right-hand column; if in degrees Fahrenheit, read Centigrade equivalent in left-hand column.

°C	°F \ °C	°F
-73	-100	-148
-68	-90	-130
-62	-80	-112
-57	-70	-94
-51	-60	-76
-46	-50	-58
-40	-40	-40
-34	-30	-22
-29	-20	-4
-23	-10	14
-17.8	0	32
-17.2	1	33.8
-16.7	2	35.6
-16.1	3	37.4
-15.6	4	39.2
-15.0	5	41.0
-14.4	6	42.8
-13.9	7	44.6
-13.3	8	46.4
-12.8	9	48.2
-12.2	10	50.0
-11.7	11	51.8
-11.1	12	53.6
-10.6	13	55.4
-10.0	14	57.2
-9.4	15	59.0
-8.9	16	60.8
-8.3	17	62.6
-7.8	18	64.4
-7.2	19	66.2
-6.7	20	68.0
-6.1	21	69.8
-5.6	22	71.6
-5.0	23	73.4
-4.4	24	75.2
-3.9	25	77.0
-3.3	26	78.8
-2.8	27	80.6
-2.2	28	82.4
-1.7	29	84.2
-1.1	30	86.0
-.6	31	87.8
0	32	89.6
.6	33	91.4
1.1	34	93.2
1.7	35	95.0
2.2	36	96.8
2.8	37	98.6
3.3	38	100.4
3.9	39	102.2
4.4	40	104.0

°C	°F \ °C	°F
5.0	41	105.8
5.6	42	107.6
6.1	43	109.4
6.7	44	111.2
.72	45	113.0
7.8	46	114.8
8.3	47	116.6
8.9	48	118.4
9.4	49	120.2
10.0	50	122.0
10.6	51	123.8
11.1	52	125.6
11.7	53	127.4
12.2	54	129.2
12.8	55	131.0
13.3	56	132.8
13.9	57	134.6
14.4	58	136.4
15.0	59	138.2
15.6	60	140.0
16.1	61	141.8
16.7	62	143.6
17.2	63	145.4
17.8	64	147.2
18.3	65	149.0
18.9	66	150.8
19.4	67	152.6
20.0	68	154.4
20.6	69	156.2
21.1	70	158.0
21.7	71	159.8
22.2	72	161.6
22.8	73	163.4
23.3	74	165.2
23.9	75	167.0
24.4	76	168.8
25.0	77	170.6
25.6	78	172.4
26.1	79	174.2
26.7	80	176.0
27.2	81	177.8
27.8	82	179.6
28.3	83	181.4
28.9	84	183.2
29.4	85	185.0
30.0	86	186.8
30.6	87	188.6
31.1	88	190.4
31.7	89	192.2
32.2	90	194.0
32.8	91	195.8

°C	°F \ °C	°F
33.3	92	197.6
33.9	93	199.4
34.4	94	201.2
35.0	95	203.0
35.6	96	204.8
36.1	97	206.6
36.7	98	208.4
37.2	99	210.2
37.8	100	212.0
43	110	230
49	120	248
54	130	266
60	140	284
66	150	302
71	160	320
77	170	338
82	180	356
88	190	374
93	200	392
99	210	410
100	212	413.6
104	220	428
110	230	446
116	240	464
121	250	482
127	260	500
132	270	518
138	280	536
143	290	554
149	300	572
154	310	590
160	320	608
166	320	626
170	338	640
171	340	644
177	350	662
182	360	680
186	366	691
188	370	698
193	380	716
198	388	730
199	390	734
204	400	752
208	406	763
210	410	770
216	420	788
221	430	806
227	440	824
232	450	842

Water Data and Formulas

1 gallon water = 231 cubic inches = 8.333 pounds

1 pound of water = 27.7 cubic inches

1 cubic foot water = 7.5 gallons = 62.5 pounds (salt water weighs approximately 64.3 pounds per cubic foot)

Pounds per square inch at bottom of a column of water = height of column in feet x .434

Horsepower to Raise Water
If pumping liquid other than water, multiply the gallons per minute below by the liquids specific gravity

$$\text{Horsepower} = \frac{\text{gallons per minute x total head in feet}}{3960}$$

Gallons Per Minute through a Pipe
GPM = .0408 x pipe diameter inches^2 x feet/minute water velocity

Weight of Water in a Pipe
Pounds water = pipe length feet x pipe diameter inches^2 x .34

(no losses included)

Water Level (inches)	Gallons per Minute Discharge for a Given Nominal Pipe Diameter (inches)				
	5	6	8	10	12
5	163	---	---	---	---
6	195	285	---	---	---
7	228	334	580	---	---
8	260	380	665	1060	---
9	293	430	750	1190	1660
10	326	476	830	1330	1850
11	360	525	915	1460	2020
12	390	570	1000	1600	2220
13	425	620	1080	1730	2400
14	456	670	1160	1860	2590
15	490	710	1250	2000	2780
16	520	760	1330	2120	2960
17	550	810	1410	2260	3140
18	590	860	1500	2390	3330
19	620	910	1580	2520	3500
20	650	950	1660	2660	3700
21	685	1000	1750	2800	3890
22	720	1050	1830	2920	4060
23	750	1100	1910	3060	4250
24	---	1140	2000	3200	4440

Measurement Information

Measures of Pressure

1 Pound Per Square Inch = 144 Pounds Per Square Foot = 0.068 Atmosphere = 2.042 Inches of Mercury at 62°F = 27.7 Inches of Water at 62°F = 2.31 Feet of Water at 62°F.

1 Atmosphere = 30 Inches of Mercury at 62°F = 14.7 Pounds Per Square Inch = 2116.3 Pounds Per Square Foot = 33.95 Feet of Water at 62°F.

1 Foot of Water at 62°F = 62.355 Pounds Per Square Foot = 0.433 Pounds Per Square Inch.

1 Inch of Mercury at 62°F = 1.132 Feet of Water = 13.58 Inches of Water = 0.491 Pounds Per Square Inch.

Column of Water 12 Inches High, 1 Inch in Diameter = .341 Pounds

Length Conversion Constants

Millimeters x .039370 = Inches
Meters x 39.370 = Inches
Meters x 3.2808 = Feet
Meters x 1.09361 = Yards
Kilometers x 3,280.8 = Feet
Kilometers x .62137 = Statute Mile
Kilometers x .53959 = Nautical Miles

Inches x 25.4001 = Millimeters
Inches x .0254 = Meters
Feet x .30480 = Meters
Yards x .91440 = Meters
Feet x .0003048 = Kilometers
Statute Miles x 1.60935 = Kilometers
Nautical Miles x 1.85325 = Kilometers

Weight Conversion Constants

Grams x .03527 = Ounces (Avd.)
Grams x .033818 = Fluid Ounces (Water)
Kilograms x 35.27 = Ounces (Avd.)
Kilograms x 2.20462 = Pounds (Avd.)

Ounces (Avd.) x 28.35 = Grams
Fluid Ounces (Water) x 29.57 = Grams
Ounces (Avd.) x .02835 = Kilograms
Pounds (Avd.) x .45359 = Kilograms

Thread Dimensions

Size	Pipe OD	Tapered Threads		Straight Threads		
		NPT	BSPTr	Acme 3A		
		TPI	TPI	TPI	ODM (max)	IDF (min)
1/8"	.405	27	28			
1/4"	.504	18	19			
3/8"	.675	18	19			
1/2"	.840	14	14			
3/4"	1.050	14	14			
1"	1.315	11.5	11	8	1.462	1.352
1-1/4"	1.660	11.5	11			
1-1/2"	1.900	11.5	11	8	1.994	1.884
2"	2.375	11.5	11	8	2.526	2.416
2-1/2"	2.875	8	11	8	3.058	2.948
3"	3.500	8	11	8	3.590	3.480
4"	4.500	8	11	6	4.695	4.544
5"	5.563	8	11			
6"	6.625	8	11			
8"	8.625	8				
10"	10.750	8				
12"	12.750	8				

ODM -- Outside Diameter of the Male

IDF -- Inside Diameter of the Female

TPI -- Threads Per Inch

GHT (3/4") -- 1.0625 ODM, 11-1/2 TPI

NPT = National Pipe Taper

BS = British Standard

Normal Engagement Length of NPT Thread in Inches (A) *

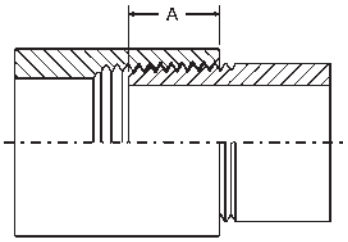

* Dimensions given do not allow for variations in tapping or threading.

Sanitary Size	A
1/8"	1/4"
1/4"	3/8"
3/8"	3/8"
1/2"	1/2"
3/4"	9/16"
1"	11/16"
1-1/4"	11/16"
1-1/2"	11/16"
2"	3/4"

Sanitary Size	A
2-1/2"	15/16"
3"	1"
4"	1-1/8"
5"	1-1/4"
6"	1-5/16"
8"	1-7/16"
10"	1-5/8"
12"	1-3/4"

Identifying Threads

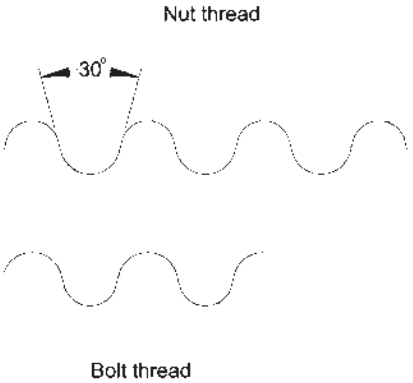

DIN knuckle threads for sanitary applications have a unique round shape making them easy to identify. There is a 30° included angle between the threads. There are 6 to 8 threads per inch for sanitary fittings. Measuring the ID of the round nut or the OD of the threads on the weld liner will help with identification. As Dixon Sanitary will be offering inch sizes, the best size identification is the OD of the tube.

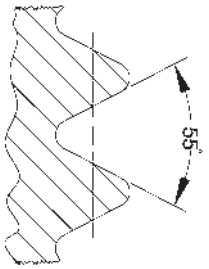

The threads for RJT fittings are British Standard Whitworth. These look similar to straight threads but have a 55° angle and small radii on the tips rather than the flat tips and 60° angle found on U.S. standard straight threads. There are 6 to 8 threads per inch for the sanitary fittings.

Identifying Threads

It is important to identify the threads required before ordering couplings.

Identifying threads can sometimes be the most difficult and frustrating part of coupling selection. However, without the right combination of threads, you may not provide a functional or safe connection.

The diameters, threads per inch (TPI) and thread pitch, etc. are necessary to completely identify a thread. Ring, Plug and GO/NOGO gauges are required to accurately gauge or identify threads. In the field, in the absence of these gauges, thread leaf gauges can be used to identify the Threads Per Inch (TPI) and the thread pitch. On threads you have determined to be straight threads, a caliper can be used to measure the Outside Diameter of the Male (ODM) or the Inside Diameter of the Female (IDF). A caliper can also be used to take measurements of tapered thread diameters. However, these are more difficult to define because of the taper. Fortunately, there are few tapered threads to deal with and these can usually be identified from the nominal ODM and the TPI.

However, identifying the thread may not fully identify what is needed in a mating fitting. The application is the primary *limiting factor on the thread type used.* Dixon offers products with a wide variety of threads used with hose, pipe and hydraulics.

When attempting to choose a fitting, it is always advisable to first identify the thread to which it must connect. This may entail checking with a fitting or equipment manufacturer.

When it is not possible to identify the thread:

1) Determine the number of threads per inch by measuring the distance from peak of thread to peak of thread across the largest number of whole threads. Then divide the number of threads by the measurement

   (This will provide the TPI).

2) Check to see if the thread is straight or tapered or flat thread.

   a) Straight Threads

      Measure the Outside Diameter of the Male (ODM) or the Inside Diameter of the Female (IDF), from peak of thread to peak of thread.

   b) Tapered Threads

      Measure the Outside Diameter of the Male (ODM) at the large end and the small end, or the Inside Diameter of the Female (IDF) at the large end and the small end, from peak of thread to peak of thread. Then measure the Outside Diameter (OD) of the unthreaded pipe.

   c) Flat (ACME) Threads

      Acme threads are used for bevel seat and John Perry fittings in sanitary installations. Sizes 1" to 3" (tube size) have 8 threads per (TPI) and the 4" has 6 TPI. There is not a sharp point on this thread and it is a straight thread. The tops of the threads are flat and there is typically a 29° included angle between the threads. Measure the outside diameter of the male (OD) or inside diameter of the female (ID)

Once the application and these two pieces of information have been determined, the thread can generally be determined. When in doubt, contact the factory.

Straight Thread

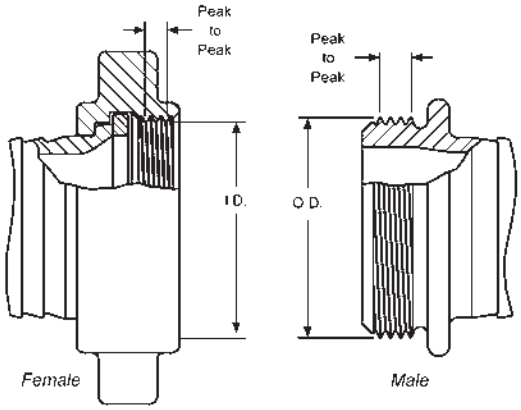

Tapered Thread

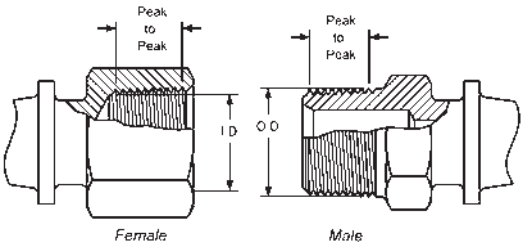

ACME Thread

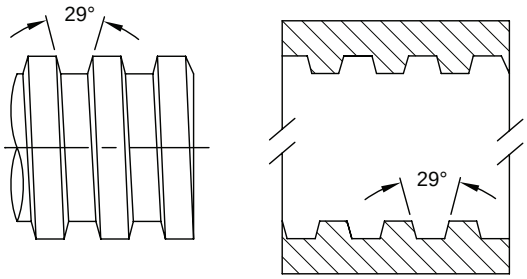

Identifying Fittings

NOTE: Clamp type connections are the most popular and are sometimes referred to as Tri-Clamp connections.
All connections are Tube OD ½" to 12"
Materials are available in 304 and 316L stainless steel, (other alloys can be special order)

Part Number Descriptions

2 = Elbow (unpolished, polished, clamp, 90°, 45°, U-bend, sweep, etc.)
7 = Tee (unpolished, polished, clamp, reducing, etc.)
9 = Cross (unpolished, polished, clamp, reducing, etc.)
13 = Clamp (single pin, squeeze, double pin, 3 segment, bolted, I-line, lightweight, etc.)
14 = Ferrule (short, long, auto weld, tank, roll on, hose adapter, male I-line, plain bevel seat/ John Perry)
15 = Ferrule (bevel seat threaded or I-line female)
16 = End Cap (clamp, weld, I-line, bevel, etc.)
17 = Adapter ((bevel to clamp, I-line to clamp, etc.)
19 = Adapter (tube O.D. to national pipe thread)
21 = Male Adapter (bevel, clamp, I-line to male pipe thread)
22 = Female Adapter (bevel, clamp, I-line to female pipe thread)
23 = Thermometer (bevel, clamp, I-line, etc.)
24 = Hanger (hex, round, etc.)
28 = Y or lateral (unpolished, polished, clamp, reducing, etc.)
31 = Concentric Reducer (unpolished, polished, clamp, etc.)
32 = Eccentric Reducer (unpolished, polished, clamp, etc.)
38 = Flange
40 = Gaskets (1" and above)
42 = Gaskets (½" and ¾)
45 = Check Valve (spring, ball, air blow)
51 = Butterfly Valve
54 = Sight Glass
RG = Hex tube hanger with rubber grommets
RGC = Hex tube hanger with rubber grommets and coupler
PS = Hex tube hanger with ABS sleeves
PSC = Hex tube hanger with ABS sleeves and coupler
RPH = Round tube hanger with Buna inserts
RPHC= Round tube hanger with Buna inserts and coupler
SP = Santoprene block tube style hanger
PP = Polypropylene block tube style hanger

Fittings Ordering Information

Material Designation:

G - 304
R - 316L

Size:

½" = 050	3" = 300
¾" = 075	4" = 400
1" = 100	6" = 600
1½" = 150	8" = 800
2" = 200	10" = 1000
2½" = 250	12" = 1200

Ordering Example:

B 3 1 1 4 M P - G 1 5 0 1 0 0

Description:

Concentric reducer with clamp ends in 304 material 1½" by 1"

Identifying Fittings

Clamp Ferrules

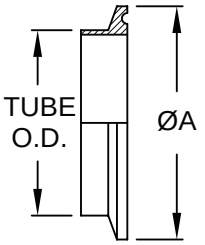

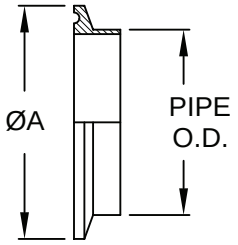

Note: flanges are symmetrical

Tube

Tube OD (inches)	ØA
½	.992
¾	.992
1	1.984
1½	1.984
2	2.516
2½	3.047
3	3.579
4	4.682
5	5.687
6	6.570
8	8.602
10	10.570
12	12.570

Pipe

Pipe Size (inches)	Pipe OD (inches)	ØA
1	1.315	1.984
1¼	1.660	2.516
1½	1.900	2.516
2	2.375	3.047
2½	2.875	3.579
3	3.500	4.125
4	4.500	5.125
6	6.625	7.195
8	8.625	9.200

Clamp Connection

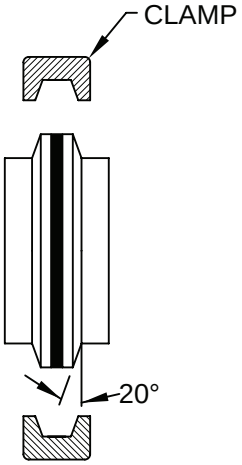

sizes 1" - 12"

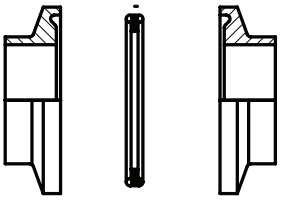

sizes ½" and ¾"

Gaskets

Type 1
Standard
½" and ¾"

Type 1
Standard
1" - 12"

Type 2
Flanged
1" - 12"

Identifying Fittings

Bevel Seat Ferrules

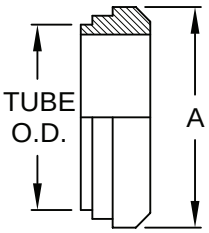

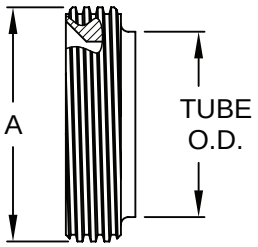

Plain

Tube OD (inches)	ØA
1	1.312
1½	1.848
2	2.380
2½	2.912
3	3.444
4	4.508

Threaded

Tube OD (inches)	ØA
1	1.462
1½	1.994
2	2.526
2½	3.058
3	3.590
4	4.695

13H Hex Nuts

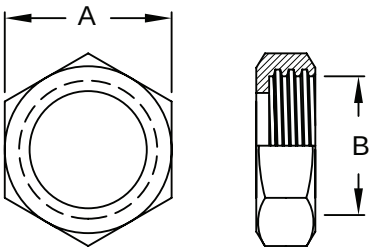

Nut

Tube OD (inches)	A Across Flats	B Thread ID	Threads per inch
1	1.812	1.362	8
1½	2406	1.894	8
2	3.000	2.426	8
2½	3.594	2.958	8
3	4.188	3.490	8
4	5.438	4.554	6

Acme Thread Form

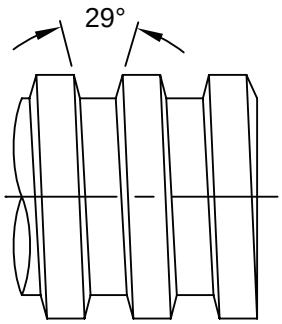

male thread

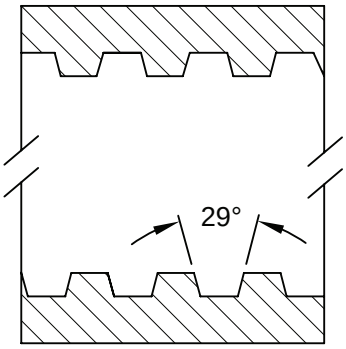

female thread

Gasket

Identifying Fittings

John Perry Ferrules

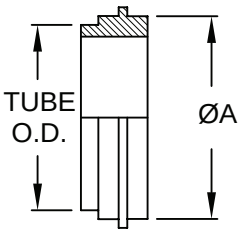

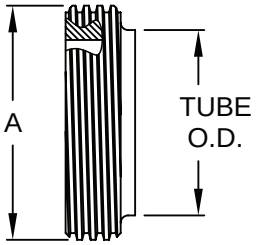

Plain

Tube OD (inches)	ØA
1	1.125
1½	1.656
2	2.187
2½	2.656
3	3.187
4	4.187

Threaded

Tube OD (inches)	ØA
1	1.462
1½	1.994
2	2.526
2½	3.058
3	3.590
4	4.695

13H Hex Nuts

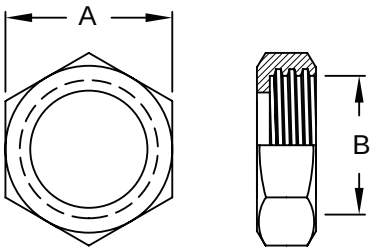

Tube OD (inches)	A Across Flats	B Thread ID	B Thread ID
1	1.812	1.362	8
1½	2.406	1.894	8
2	3.000	2.426	8
2½	3.594	2.958	8
3	4.188	3.490	8
4	5.438	4.554	6

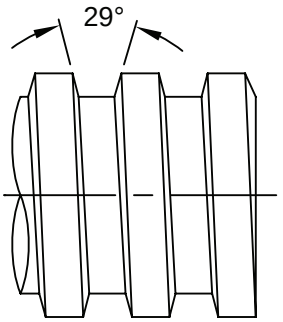

male thread

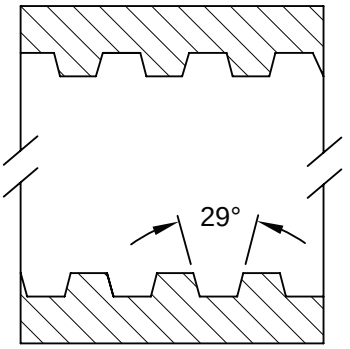

female thread

Gasket

Identifying Fittings

I-line Ferrules

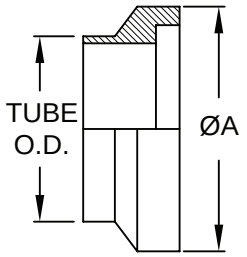

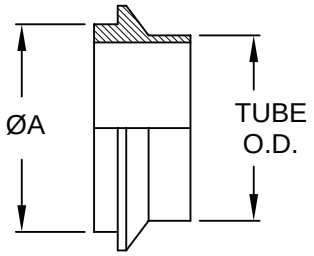

Female

Tube OD (inches)	ØA
1	1.985
1½	1.985
2	2.640
2½	3.307
3	3.870
4	4.870
6	7.495
8	9.945

Male

Tube OD (inches)	ØA
1	1.250
1½	1.740
2	2.240
2½	2.740
3	3.300
4	4.297
6	6.830
8	8.830

Clamp Connection

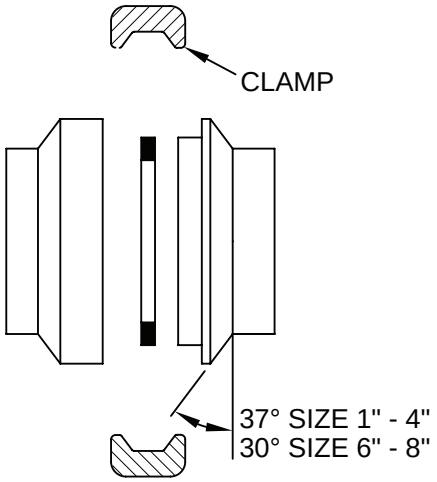

Gasket

Identifying Fittings

Q-line Ferrules

both halves of a jointed connection are symmetrical

Tube OD (inches)	ØA
1	1.985
1½	1.985
2	2.640
2½	3.307
3	3.870
4	4.870

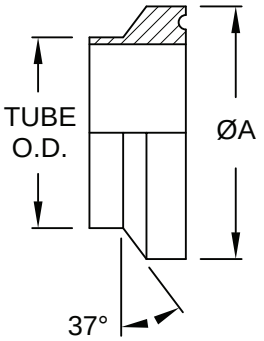

Clamp Connection

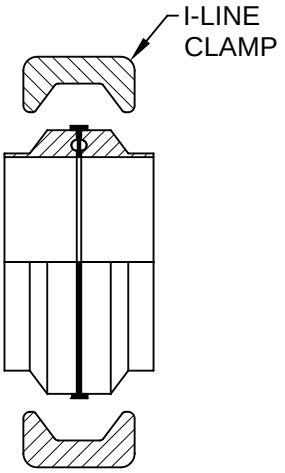

Gasket

Identifying Fittings

APC Clamped Ferrules

both halves of a jointed connection are symmetrical

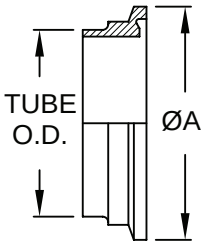

clamp ferrule

Tube OD (inches)	ØA
1	1.98
1½	1.98
2	2.52
2½	3.05
3	3.58
4	4.68

APC Threaded Ferrules

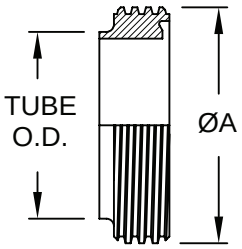

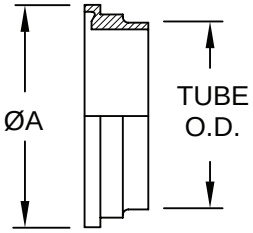

threaded ferrule

Tube OD (inches)	ØA
1	1.462
1½	1.994
2	2.526
2½	3.058
3	3.590
4	4.695

plain ferrule

Tube OD (inches)	ØA
1	1.312
1½	1.848
2	2.380
2½	2.912
3	3.444
4	4.508

13H Hex Nuts

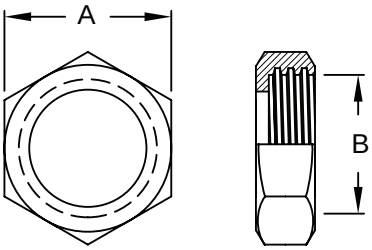

Nut

Tube OD (inches)	A Across Flats	B Thread ID	Threads per inch
1	1.812	1.362	8
1½	2406	1.894	8
2	3.000	2.426	8
2½	3.594	2.958	8
3	4.188	3.490	8
4	5.438	4.554	6

Gasket

Identifying Fittings

DIN Ferrules

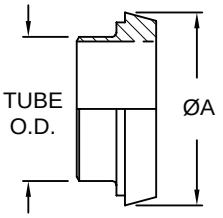

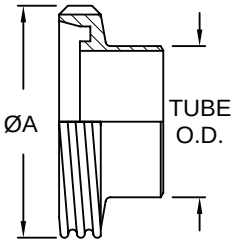

Liners

Tube OD (inches)	ØA
1	1.73
1½	2.20
2	2.68
2½	3.39
3	3.94
4	4.76

Males

Tube OD (inches)	ØA
1	2.04
1½	2.56
2	3.07
2½	3.74
3	4.31
4	5.10

DIN Round Nuts

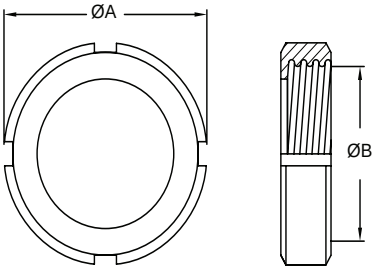

Nut

Tube OD (inches)	DN	ØA	B Thread ID	Threads per inch
1	25	2.48	1.88	6
1½	40	3.07	2.39	6
2	50	3.62	2.90	6
2½	65	4.41	3.49	6
3	80	5.00	4.14	4
4	100	5.83	4.94	4

Note: nuts 3" and larger will have 6 slots

DIN Thread Form

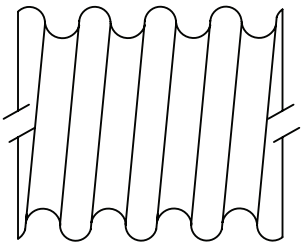

male thread

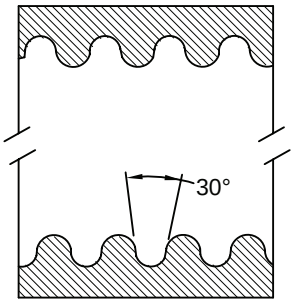

female thread

Gasket

Identifying Fittings

RJT Ferrules

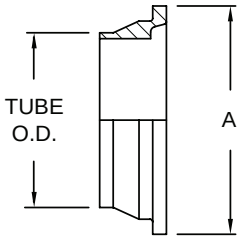

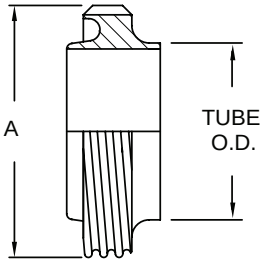

Liners

Tube OD (inches)	ØA
1	1.63
1½	2.13
2	2.63
2½	3.13
3	3.63
4	4.63

Males

Tube OD (inches)	ØA
1	1.80
1½	2.30
2	2.86
2½	3.36
3	3.86
4	4.86

RJT Hex Nuts

Nut

Tube OD (inches)	ØA Thread ID	B Across flats	Threads per inch
1	1.68	2.00	8
1½	2.18	2.56	8
2	2.69	3.12	6
2½	3.19	3.62	6
3	3.69	4.12	6
4	4.69	5.12	6

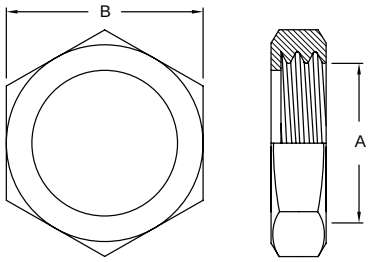

RJT Thread Form (British Standard Witworth)

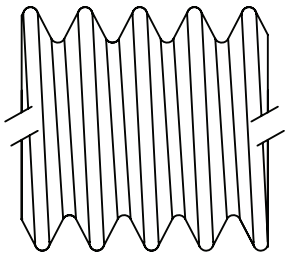

male thread

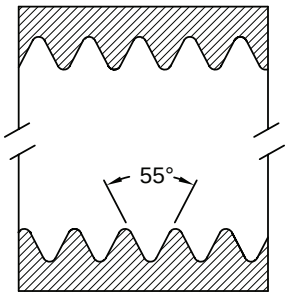

female thread

Gasket

Also known as BSM (British Standard Milk) in Australia
modified into Australian CIP Union

Identifying Fittings

SMS Couplings

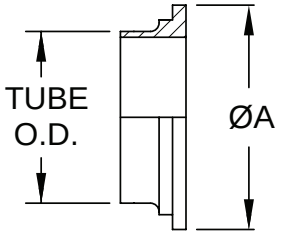

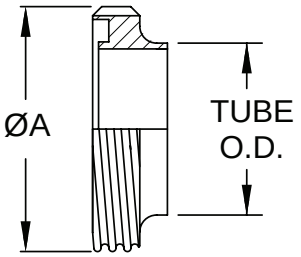

Liners

Tube OD (inches)	ØA
1	1.40
1½	2.17
2	2.56
2½	3.15
3	3.66
4	4.65

Males

Tube OD (inches)	ØA
1	1.55
1½	2.34
2	2.74
2½	3.33
3	3.84
4	4.90

SMS Round Nuts

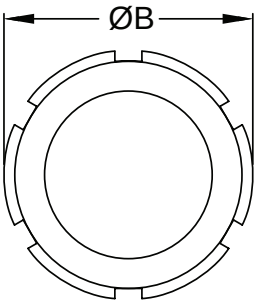

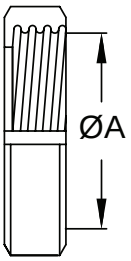

Nut

Tube OD (inches)	ØA Thread ID	ØB	Threads per inch
1	1.44	2.01	6
1½	2.22	2.91	6
2	2.62	3.31	6
2½	3.21	3.94	6
3	3.72	4.49	6
4	4.72	5.43	4

SMS Thread Form

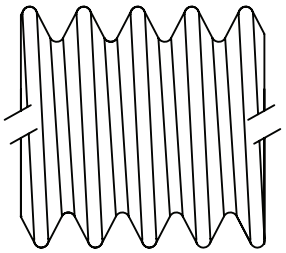

male thread

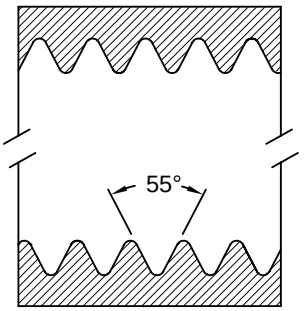

female thread

Gasket

Identifying Fittings

IDF Couplings

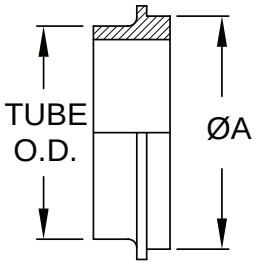

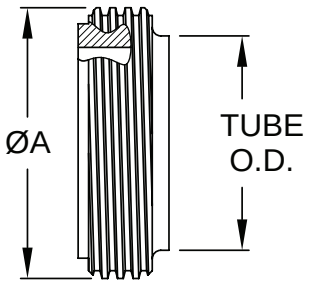

Liners

Tube OD (inches)	ØA
1	1.33
1½	1.85
2	2.38
2½	2.91
3	3.44
4	4.75

Males

Tube OD (inches)	ØA
1	1.46
1½	1.99
2	2.53
2½	3.06
3	3.59
4	4.96

IDF Hex Nuts

Nut

Tube OD (inches)	ØA Thread ID	B Across flats	Threads per inch
1	1.81	1.35	8
1½	2.36	1.88	8
2	2.95	2.42	8
2½	3.54	2.95	8
3	4.13	3.48	8
4	5.24	4.81	6

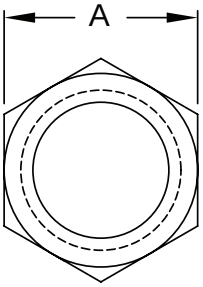

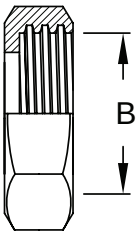

IDF Thread Form
(same as Acme thread form)

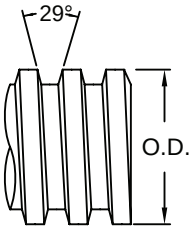

male thread

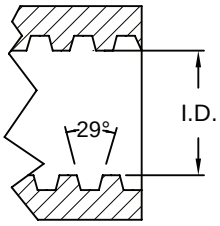

female thread

Gaskets

Identifying Fittings

Vacuum Flanges

both halves of a jointed connection are symmetrical

clamp ferrule

Tube OD (inches)	ØA
½	1.18
¾	1.18
1	1.57
1½	2.16
2	2.95

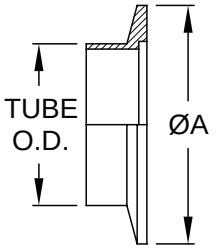

Clamp Connection

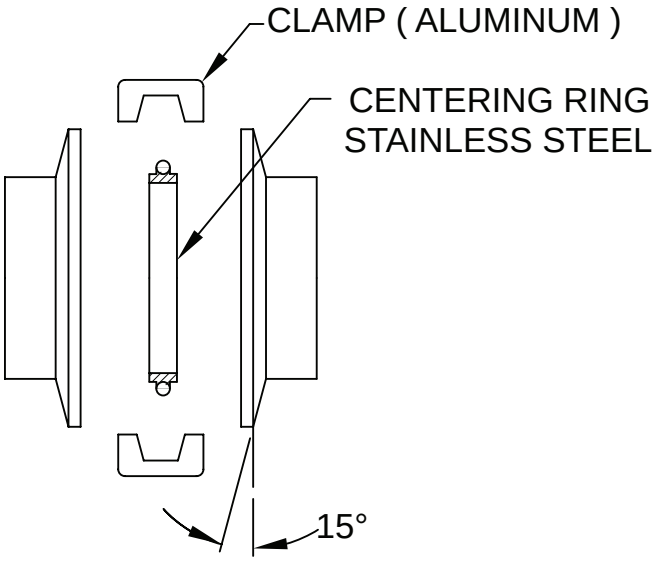

Gasket

Austenitic Stainless Steel Chemistry

Element	C	Mn	P	S	Si	Cr	Ni	Mo
304 [1]	0.08	2.00	0.045	0.030	1.00	18.0-20.0	8.0-10.0	
316L [1]	0.03	2.00	0.045	0.030	1.00	16.0-18.0	10.0-14.0	2.0-3.0
316L BPE [2]	0.03	2.00	0.045	0.05 - 0.17	1.00	16.0-18.0	10.0-14.0	2.0-3.0
CF-8 [3]	0.08	1.50	0.04	0.04	2.00	18.0-21.0	8.0-11.0	
CF-8M [3]	0.08	1.50	0.04	0.04	2.00	18.0-21.0	9.0-12.0	2.0-3.0

[1] AISI specifications for wrought material
[2] ASME BPE 2012
[3] ASTM A743
- Percentages are maximums unless a range is specified

Finish Information

BPE Surface Finish Requirements (SF-3)

Surface designation	Mechanically Polished ID and OD R_a Maximum		Bradford™ High Purity code
	ID µ-in.	OD µ-in	
SF0	no finish requirement	no finish requirement	
SF1	20	32	***PL***
SF2	25	32	
SF3	30	32	
Surface designation	Mechanically Polished OD and Electropolished ID R_a Maximum		
	ID µ-in.	OD µ-in	
SF4	15	32	***PM***
SF5	20	32	
SF6	25	32	

Finish Designations for Tubing and Fittings

Finish Number	Finish Conditions
1	Mill Finish (bright annealed, pickled, sand blast or tumbled)
3	Polished 180 grit inside diameter (ID) only
5	Polished 150 grit outside diameter (OD) only
7	Polished 180 grit outside/inside diameter (OD/ID)
3A	Polished 150 grit outside (OD), 32R_a grit inside diameter (ID)

Glossary of Terms

#3 finish Used on stainless steel tubing, only the ID is polished to sanitary standards. The OD is unpolished.

#4 dairy finish Used on any surface, stainless steel is polished to sanitary standards, with 180 grit abrasives.

#5 finish Used on stainless steel tubing, only the OD is polished. The ID is unpolished.

#7 finish Used on stainless steel tubing polished to sanitary standards inside and outside.

3A Symbol Introduced in 1956, the 3A Symbol is a registered trademark used to identify equipment that meets 3A Sanitary Standards for design and fabrication. The 3A Symbol on dairy and food equipment serves three important purposes:

1. assures processors that equipment conforms to sanitary standards
2. provides accepted criteria to equipment manufacturers for sanitary design
3. establishes guidelines for uniform evaluation and compliance by sanitarians

3A Finish Product surface finish equivalent to 150 grit or better OD, and 180 grit or better ID. A maximum of Ra 32 microinch (0.8 micron) is indicated.

ABS (Acrylicnitrile-butadiene-styrene) a thermoplastic resin with an excellent resistance to acids, bases, salts and some solvents. It is heat resistant to 230°F.

ANSI American National Standards Institute, Inc.

ASME American Society of Mechanical Engineers

ASTM American Society for Testing and Materials

Acme Thread A flat grooved helical ridge on a nut or bolt. This typically has a 29° included angle. Used on bevel seat and John Perry fittings

Anneal Stress relief of stainless steel, a heat treatment to remove the stresses generated in forming and welding operations. This heat treatment is best done under controlled atmosphere or vacuum to maintain the mill finish. The fittings are not quenched, as in solution annealing; this would reintroduce residual stresses. Done correctly, parts are processed to provide minimum residual stresses and full corrosion resistance.

Bevel Seat Ferrules A set of plain (male) and externally threaded (female) bushings with matching bevel angles that produce a leak-proof seal when connected with a hex union nut. The threads used are Acme form.

Bright Anneal Annealing in a protective medium to prevent discoloration of the surface.

Bright Annealed Finish A silvery satin surface, approximately the mill finish of stainless steel.

Buna Synthetic rubber, a copolymer of acrylonitrile and butadiene

Burst Pressure The pressure at which rupture occurs.

Clamp A device used to join mechanical parts, fittings, ensuring a quick leak-proof connection and enabling easy take down.

Cold Flow Continued deformation or movement of rubber or PTFE under stress. The new set is not reversible.

Glossary of Terms

Compression Set The deformation that remains in rubber or PTFE after it has been subjected to and released from stress such as a clamp. The longer the stress is maintained the more definitive the deformation.

Durometer An instrument for measuring the hardness of rubber by resistance to penetration

Durometer Hardness A numerical value which indicates the resistance to indentation of the blunt indentor of the durometer.

EPDM Ethylene propylene diene monome, a synthetic rubber

Elastomer Any of various elastic substances resembling rubber.

Electropolishing A controlled electrochemical process utilizing acid electrolyte, DC current, anode and cathode to smooth the surface by removal of metal.

Encapsulation The enclosing of material by an encapsulant for protective purposes. In a ball valve the ball is encased in PTFE, preventing the material flowing through the valve from getting behind the ball causing contamination problems.

Flow Coefficient (C_v) C_v the flow rate in U.S. gallons of water (at 60°F) that will pass through the valve in one minute with a differential pressure across the valve of 1 PSI.

Ferrule A bushing used to secure a tube joint. A special bushing designed for welding to the end of tubing. Two ferrules and a gasket make a leak-proof connection when used with the complimentary clamps.

Fitting A small part of an apparatus (may be detachable).

Fluorocarbon Elastomer known as Viton® a registered trademark of DuPont, generally known as FKM.

Friction Loss The part of the total loss that occurs as the fluid flows through straight pipe.

Hex Union Nut An internally acme-threaded six-sided connector used to assemble bevel seat fittings.

ISO5211 International standard for actuator and valve interface

Internal Expansion (IX) A plug (or bullet) is pulled through a stem or a set of blades (fingers) increase the stem ID to the plug OD or a predetermined setting when using expansion blades (fingers). This forces the stem serrations into the hose tube and the hose cover into the serrations of the ferrule.

Laminar Flow The smooth flow of a viscous liquid through a tube or pipe. In that case, the velocity of flow varies from zero at the walls to a maximum along the centerline of the vessel.

Maximum-Shut-Off Pressure The pressure of the media flowing into the valve against which the valve will have to close.

Media The material flowing through the valve.

Modulating Service Proportional positioning of a valve between the open and closed position. Used for flow control processes.

Glossary of Terms

MTR Material Test Report

Neoprene Synthetic rubber, chemically and structurally similar to natural rubber

Nominal Size A dimensional value assigned for the purpose of convenient designation. Used for pipe sizes.

On-Off Service When the valve is being used to start or stop flow by being cycled to the full open or full closed position.

Operating Pressure The pressure at which system functions. Also known as working pressure.

Polish To make smooth and shiny by rubbing. Fittings may be machine polished to 180 grit finish. Polish is ID, OD, or both per customer request.

Polyproylene A lightweight synthetic plastic

Pressure The force per unit area applied on a surface in a direction perpendicular to that surface.

PSI Pounds per square inch

PSIG Pounds per square inch gauge

PTFE Tetrafluoroethylene is a high performance thermo plastic polymer that has excellent dielectric strength, chemical and temperature resistance.

Santoprene A thermoplastic elastomer, a rubber-like material that complies to FDA requirements

Service Temperature The maximum and minimum temperature of the media in a system.

Silicone Dimethyl silicone, a synthetic rubber

Sintering Heat process in which powdered metal particles are heated to near melting point, fusing the metal granules together.

Stem Torque The force required at the valve stem to open or close the valve against system pressure and service conditions.

Supply Pressure The plant air supply pressure available to operate a pneumatic actuator. (plant air)

Surge Also known as water hammer. A rapid rise or decrease of internal pressure. Surge conditions occur for various reasons, typically, but not limited to: start and stop sequences.

Torque A twisting or turning force. Usually measured in inch pounds (in-lbs) or foot pounds (ft-lbs)/(force through a distance).

Tube A hollow cylinder especially one that conveys a fluid. For sanitary applications a thin wall is implied.

Tube Fitting A length of tubing formed into a usable shape either welded to an apparatus or welded to ferrules for use in an apparatus.

Tubing A piece or length of tube.

Glossary of Terms

Tumble Polish Surface A uniform finish applied by vibratory equipment to stainless steel, varying from matte grey to bright, depending on media used. This process may cause work hardening on the surfaces of stainless steel.

Turbulent Flow Irregular flow that is characterized by tiny whirlpool regions. The velocity of this fluid is definitely not constant at every point.

Velocity Head (h_v) The energy of a liquid as a result of its motion at some velocity V. It is the equivalent head in feet through which the water would have to fall to acquire the same velocity, or in other words, the head necessary to accelerate the water. Velocity head can be calculated from the following formula:

$$h_v = \frac{V^2}{2g}$$

Where g = 32.3 ft/second
V = liquid velocity in feet per second

The velocity head is usually insignificant and can be ignored in most high head systems. However, it can be a large factor and must be considered in low head systems

WOG Water, Oil, Gas. Pressure rating for valves handling these products. This does not include steam.

Welding Join two (or more) pieces of material by applying heat to produce a localized union through fusion across the interface. For sanitary fittings, a ferrule is attached to the ends of a tube fitting by TIG welding without the addition of filler metal.

Work (Strain) Hardening An increase in hardness and strength caused by plastic deformation at temperatures below the annealing ranges.

Trademarks

Tygon® is a registered trademark of Saint-Gobain Corporation.
Santoprene™ is a trademark of Exxon Mobil Chemical
Tuf-Steel® is a registered trademark of RubberFab Technologies Group
Torque-rite™ is a trademark of RubberFab Technologies Group

Index

A

Air Fittings

Couplings....163–165
Polyethylene Tubing....170
Push-In Fittings....167–169

B

Ball Valves

2-Piece Ball Valves
brass....193
industrial, stainless....189
3-Piece Ball Valves
encapsulated, stainless....182
handle kits....182
repair kits....182
industrial, stainless....191
non-encapsulated, stainless.... 188
repair kits....188
Automation....195
Industrial Ball Valves....189–193
Multi-port Ball Valves
3-way
brass....194
industrial, stainless....192
sanitary, stainless.... 184-186
repair kits....186
4-way, sanitary, stainless....184, 187
repair kits....187
Private Label Handle Covers 196
Sanitary Ball Valves....182–188
Technical Information....181

Bevel Seat Fittings

Adapters
rubber hose....43
Tygon® hose....43
Cap, plain solid end....43
Elbows
45°....44
90°....44
Ferrules
plain
heavy wall tank....41
light wall tank....41

Bevel Seat Fittings, Cont...

long....40
recessed....40
recessless....40
short....40
threaded
heavy wall tank....42
light wall tank....42
long....41
recessed....42
recessless....42
short....41
Gaskets.... See Gaskets, Bevel Seat
Hex Nuts....39
Hex Wrenches....39
single sided....39
two sided....39
Other Fittings....43, 46
Reducers
concentric....45
eccentric....45

BioPharm Fittings (BPE)

Adapters....97
Caps
clamp....96
weld....96
Elbows
clamp
45°....88
90°....87
weld
45°....87,88
88°....88
90°....87
92°....88
Ferrules....96
Reducers
clamp
concentric....93,94
eccentric....95
weld
concentric....93
eccentric....94,96
Technical Data 98-100
Tees
clamp.... 89-92
reducing....90
short outlet....91
short outlet reducing....92
instrument....92

BioPharm Fittings (BPE), Cont...
weld 89, 91,92
reducing 89
short outlet 91
short outlet reducing....92
instrument 92

Butterfly Valves

Automation....211
B5101 Series
clamp end....199–201
infinite handle 200
pull handle 199
push handle....202
repair kits....203
technical information 198
trigger handle 201
weld end 199–201
B5102 Series 204
repair kits....205
B5104 Series
clamp end....207
repair kits....209
technical information 206
weld end 208
B5115 Series
clamp end....210
replacement seats 210
weld end 210
Industrial
lug....213
technical information 212
wafer....213

C

Cam and Groove

Adapters....145, 146
Couplers....145, 147
Dust Caps 148
Dust Plugs....147
Flanged Couplers & Adapters 151
Gaskets....151
Handles....148
Reducing Couplers & Adapters 149
Spool Adapters....150
Spool Couplers 150

Check Valves, Cont...

Check Valves

Air Blow Check Valves 219-220
repair kits....219
Air Relief Valves
3A 221
NPT 221
replacement parts....222
Spring Check Valves 215-216
repair kits....215
Y-Ball Check Valves 217-218
repair kits....217
seal kits 217

Clamp Fittings

Accessories for Clamps
bolt, hex head....10
bronze and brass hex nuts 10
cross hole wing nut....10
eye bolt....10
hex wing nut 10
mini cross hole wing nut 10
rivet pin....10
serrated wing nut....10
spring loaded nut....10
stainless steel hex nut 10
stainless, lock washer 10
Torque-Rite Nuts 10
Adapters, clamp by
bevel seat 14
female NPT....17
hose....15
male NPT....16
Tygon® hose 14
Caps
solid end 13
thermometer 13
Clamps
bolted....9
dairy....10
double Pin 8
single Pin....8
single pin w/serrated nut 8
squeeze....8
T-bolt 9
three Segment....9
toggle....9
Crosses....23
Elbow
45° 19
90° 18, 19

Clamp Fittings, Cont...
180° returns 23
bevel seat 19
plain 19
threaded bevel seat x clamp 19
Ferrules 11
automatic weld 12
heavy wall tank 12
light wall tank 12
long weld 11
reducing 11
roll-on for expanding 12
short weld 11
Gaskets .... See Gaskets, Clamp
Laterals 23
Reducers
clamp x plain bevel seat 21
concentric 21
eccentric 22
Spool Assembly 22
Tees
equal 20
instrument 127
reducing 20
short outlet 20
True Y 23

Cleaning and Washdown
Hot and Cold Water Mixing Station 137
rack 137
spray nozzle 136
swivel connectors 136
washdown hose 136
water-steam washdown station 137

Custom Fabrication 109

D

DIN Fittings. See European Fittings

E

European Fittings
DIN
blank cap 82
gaskets .... See Gaskets, Euorpean, DIN
round nut 82
spanner wrench 83
welding liner 82
welding male 82

European Fittings, Cont...
RJT
blank cap 84
gaskets .... See Gaskets, European, RJT
hex nut 84
spanner wrench 84
welding liner 84
welding male 84
SMS
blank cap 83
gaskets .... See Gaskets, European, SMS
round nut 83
spanner wrench 83
welding liner 83
welding male 83

F

Filters / Strainers
Dual Units 117
Filters 116
In-Line
long 112
short 112
replacement parts 113
Side-Entry 114
replacement parts 115
Wire Cloth Mesh Over Screens 116

G

Gaskets
APC
Buna - black 31
Buna - grey 31
Bevel Seat
Buna 47
EPDM 47
Flat style, Buna 47
FKM 47
PTFE 48
Silicone - white 48
Clamp
Buna - black 24
Buna - white 24
Envelope 31
EPDM 24
FKM 24
Flanged 27, 28
Mesh Screen 29

Gaskets, Cont...
Metal Detectable 26
Orifice 30
Perforated Metal Disc 30
PTFE 25
Silicone - clear 25
Silicone - white 25
European
DIN Buna 85
RJT Buna 85
SMS Buna 85
Flange 80
I-Line
Buna 62
EPDM 62
FKM 62
Virgin PTFE 63
John Perry
Buna 80 duro 53
EPDM 53
FKM 53
Pipe, Schedule 5 & 10 (clamp style)
Buna 37
Virgin PTFE 37
Q-Line
Buna 63
Technical Information
identification 230
packing and storing 230
particulate reference chart 231
sizing guide 232–233

Gauges. See Instrumentation

H

Hangers

Pipe Hangers
hex with grommets 36
hex with sleeves 36
polypropylene sleeves 36
Tube Block Hangers 108
Tube Hex Hangers 105–106
ABS replacement sleeves 107
replacement grommets
Nitrile 106
FKM 106
replacement nuts and bolts 106

High Pressure Quick Disconnect Fittings

H- Series 172
ISO-B Series 173
HT- Series 174, 175
ISO FlushFace Series 176
ST- Series 177
V-Series 178, 179

Holedall

Ferrules 154
Food grade fittings 154–156

Hose Fittings

Industrial
clamps
t-bolt 160
worm gear 159
clear PVC tubing 161
king combination nipples 157
stainless MNPT barb inserts 157
stainless garden hose/barb
female swivel 158
male 158
male & female swivel sets 158
Sanitary (IX) fittings
Bevel seat 154
Clamp end 154
Ferrule, flow chief 154
Male NPT 154
Tube weld end 154
Sanitary Crimp fittings
ferrules 156
stems 156

I

I-Line Fittings

Adapters 59
Caps, solid end
female 58
male 58
Clamps
bolted 55
heavy duty 55
single pin 55
squeeze 55
Crosses 61
Elbows 60
Ferrules

I-Line Fittings, Cont...
female
heavy wall tank....57
long weld....57
short weld....57
male
heavy wall tank....56
long weld....56
short weld....56
Gaskets.... See Gaskets, I-Line
Other Fittings....61

Instrumentation

Digital Thermometers....124
Fittings
caps....133
connectors....131
elbows....131, 133
ferrules....132
nuts....132
plugs....133
reducers....133
tees....132
unions....132
Gauges
Industrial
ABS, cased
dry....128
liquid filled....129
compound....130
liquid filled....129
vacuum....130
Sanitary Pressure Gauges
sanitary....119-120
pharmaceutical....121
homogenizer....122, 123
RTDs (temperature)....125, 126

J

John Perry Fittings

Caps, solid end....52
Crosses....52
Elbows
45°....52
90°....52
Ferrules
plain long....51
plain short....51
threaded long....51
threaded short....51

John Perry Fittings, Cont...
Gaskets.... See Gaskets, John Perry
Hex Nuts....50
Hex Wrenches
single sided....50
two sided....50
Other Fittings....52

M

Maintenance

Jax Products
food grade
anti-seize....138
penetrating oil....138
PurGel Klear....138
stainless steel cleaner and polish....138
PTFE Tape
heavy duty industrial....139
industrial....139
stainless steel....139
Thread Sealant Paste....139

P

Packaging....100

Pipe Fittings

Adapters
clamp
schedule 5....35
schedule 10....35
weld....35
Caps, solid end....34
Clamps
bolted....33
single pin....33
Ferrules
schedule 5 long....34
schedule 5 short....33
schedule 10 long....34
schedule 10 short....33
Gaskets.... See Gaskets, Pipe

Polished Fittings

Adapters
hose....70
Crosses....72

Polished Fittings, Cont...
Elbows
45° 65
90° 65
clamp 66
plain bevel seat 66
return bends, 180° 72
sweep 67
threaded bevel seat 66
Laterals 72
Other Fittings 66, 69, 71
Reducers
concentric 70, 71
eccentric 71
Tees 68
clamp x weld 69
instrument 127
long 68
reducing 68
short 68
True Y 72

Protection Covers
Clamp 23
Weld End 73

Q

Q-Line Fittings
Adapters 59
Caps, solid end
female 58
male 58
Clamps
bolted 55
single pin 55
squeeze 55
Elbows 60
Ferrules 58
Gaskets .... See Gaskets, Q-Line

R

RJT Fittings. See European Fittings

S

Sample Valves
316L
angle 223

Sample Valves, Cont...
repair kits 224
in-line 225
repair kits 226
W Series 227
repair kits 228

Sight Glasses
Acrylic Sight Glass End Caps 110
In-Line Sight Glass 110
replacement glass 110
seal kit 110

SMS Fittings. See European Fittings

Spray Balls
Rotating 134
Stationary 135

Swivels
Configurations 141
Straight
clamp 140
weld 140

T

Technical Data
Elastomer Chemical Resistance Chart 234–236
Finish Information 255
Fraction - Decimal Conversion Chart 237
Glossary of Terms 256,257
Identifying Fittings 242–254
Identifying Threads 241
Measurement Information 239
Part Number Descriptions 243
Temperature Conversions 238
Thread Dimensions 240
Water Data and Formulas 239

Topping Gun 229

Torque-Rite® Nuts 10

Tubing
304 Stainless Tube 101
316L Stainless Tube 101
ASTM-A269 Unpolished ID / OD 102
ASTM-A270 Polished ID / OD 102

U

Unpolished Fittings

Adapters....76
Caps, weld....76
Elbows
45°....75
90°....75
180° return bend....79
Flange
gaskets.... See Gaskets, Flange
neck....80
stub end....80
slip-on....80
Laterals....79
Reducers
concentric....78
eccentric....78
Tees
long....77
reducing....77
short....77
True Y....79

W

Wall Flanges....103

****-A-AL 149
****-A-SS 149
****-B-AL 149
****-B-SS 149
****-DA-AL 149
****-DA-SS 149
****-F-AL 149
****-F-SS 149
***-AA-AL 150
***-AA-SS 150
***-AL-AL 151
***-AL-SS 151
***-DD-AL 150
***-DD-SS 150
***-DL-AL 151
***-DL-SS 151
***-G-BU 151
***-G-BU 151
***-G-NE 151
***-G-SIL 151
***-G-VI 151
***-G-WB 151
***-G-WNE 151
-DBHU- 132
*-DCAP 133
-DELU- 133
-DFC- 131
-DFE- 133
*-DFPLUG 133
-DMC- 131
-DME- 131
-DRATT- 133
DS-B 166
DS-S 166
-DTMT- 133
-DTTT- 132
*-DU 132
DF-* 163
DM-* 165
FF 164
FF-S 164
FM 165
FM-S 165
FS 166
FS-* 166
HF-B 173
HF-S 173
HF-SS 173
HTF 176
HTF-SS 176
STF-SS 177
VF-B 179
VF-B-E 179
VF-SS 179
VF-SS-E 179
0817** 170
101-H*** 31
101-HX*** 31
1208** 170
13BN* 10
13CB-*.** 10
13H-G*** 39, 50
13H-G***RJT 84
13HS-*** 107
13IB 10
13IB6 10
13ILB*** 55
13ILH*** 55
13IL-Q*** 55
13LW 10
13MHHM*** 8
13MHHM***SN 8
13MHHM-3P*** 9
13MHHM-DP*** 8
13MHHM-Q*** 8
13MHHV*** 33
13MHHV-Q*** 101
13MHLA*** 9
13MHP*** 9
13MHPV*** 33
13MO*** 9
13NHN-G*** 106
13PS-*** 107
13PV-*** 36
13RBN-G***RJT 84
13RG** 91
13R-G***DIN 82
13R-G***SMS 83
13RGV** 106
13RP 10
13RP6 10
13SLN 10
13SN 10
13TR-** 10
13WGC*** 10
13WN* 10
14A-G*** 40
14AHR-G*** 43
14AHT-G*** 43
14A-R*** 40
14A-R***DIN 82
14A-R***RJT 84
14A-R***SMS 83
14-G*** 40
14MPHR-G*** 15
14MPHRL*** 15
14MPHR-R*** 15
14MPHT-R*** 14
14MPW-R*** 12
14PRF-G*** 40
14PRFJP-G*** 51
14PRFJP-R*** 51
14PRF-R*** 40
14R-G*** 40
14RMP-G*** 12
14RMP-R**** 12
14VB-R*** 80
14W-G*** 41
14WHI-G*** 56
14WHI-R*** 56
14WHRL-R*** 70
14WHR-R*** 70
14WI-G*** 56
14WI-R*** 56
14WL-G*** 41
14WLI-G*** 56
14WLI-R*** 56
14WLMP-G*** 12
14WLMP-R*** 12
14WMP-G*** 11
14WMP-R*** 11
14WMV-R*** 33
14WMX-R*** 33
14WQ-G*** 58
15A-G*** 41
15AHT-G*** 43
15A-R*** 41
15A-R***DIN 82
15A-R***RJT 84
15A-R***SMS 83
15-G*** 42
15R-G*** 42
15TRF-G*** 41
15TRFJP-G*** 51
15TRFJP-R*** 51
15TRF-R*** 41
15W-G*** 42
15WHI-G*** 57
15WHI-R*** 57
15WI-G*** 57
15WI-R*** 57
15WL-G*** 42
15WLI-G*** 57

15WLI-R*** 57
15W-R*** 42
16A-G*** 43
16AI-14I*** 58
16AI-14I***R 58
16AI-15I*** 58
16AI-15I***R 58
16AJP-G*** 52
16AJP-R*** 52
16AMP-G*** 13
16AMP-G***SMS 83
16AMP-R*** 13
16AMP-R***DIN 82
16AMV-R*** 34
16AQ-G*** 58
16A-R*** 43
17-14I-14MPG*** 59
17-15I-14MPG*** 59
17MP-14-G*** 14
17MP-15-G*** 14
21MP-G*** 16
21MP-R*** 16
22MP-G*** 17
22MP-R*** 17
24PFX*.*** 154
25H-*** 39, 50
3009**** 168
3014**** 168
3102**** 169
3103**** 167
3104**** 169
3106**** 169
3108**** 167
3109**** 168
3113**** 169,170
3116**** 169
3126**** 169
3129**** 169
3140**** 169
3148**** 169
3175**** 168
32PFX2.*** 154
3S-*-15U-GFBKSS 120
3S-*-15U-GFBTSS 120
3S-*-2U-GFBKSS 120
3S-*-2U-GFBTSS 120
40BS-E*** 47
40BS-F*** 47
40BS-H*** 48
40BS-O*** 47
40BS-S*** 48
40BS-X*** 48
40BS-Y*** 47
40IE*** 62
40IE***16 62
40IH*** 62
40IT*** 63
40IV*** 62
40JP-E*** 53
40JP-G*** 53
40JP-SFY*** 53
40JP-U*** 53
40MP-E*** 24
40MP-EZ*** 26
40MPF-E*** 27
40MPF-SFY*** 28
40MPF-U*** 27
40MPF-UW*** 27
40MPF-XC*** 28
40MPF-XW*** 28
40MP-G*** 25
40MP-GR*** 31
40MP-GRE*** 31
40MPS-E*** 29
40MP-SFY*** 24
40MP-SFYZ*** 26
40MPS-SFY*** 29
40MPS-U*** 29
40MP-U*** 24
40MP-U***DIN 85
40MP-U***RJT 85
40MP-U***SMS 85
40MP-UP*** 30
40MP-UW*** 24
40MP-UZ*** 26
40MPV-G*** 37
40MPV-U*** 37
40MP-XC*** 25
40MP-XW*** 25
40PFX3.*** 154
40QH*** 63
40QT*** 63
42MP-E*** 24
42MP-G*** 25
42MP-GR*** 31
42MP-GRE*** 31
42MP-SFY*** 24
42MP-U** 24
42MP-UW** 24
42MP-XC** 25
42MP-XW** 25
48PFX*.*** 154
4-DTTM-4 118
590****SS 158
591****SS 158
592****KSS 158
64PFX4.*** 154
A269-G***U 102
A269-R***U 102
A270-G***P 102
A270-R***P 102
A80MP-SFY*** 30
A80MP-U*** 30
B14C31-G*** 21
B16W-G*** 76
B16W-R*** 76
B19MPV-R*** 35
B19MPX-R*** 35
B19WB-G*** 76
B19WB-R*** 76
B19WX-R*** 35
B22WB-G*** 76
B22WB-R*** 76
B23BMP-G*** 13
B23BMP-R*** 13
B24**HAP-G*** 108
B24**STW-G*** 108
B24HS-G*** 107
B24PS-G*** 107
B24PV-G*** 36
B24RGC16-G*** 106
B24RGC-G*** 105
B24RG-G*** 105
B24RGSFY-G*** 105
B24RPH-G*** 107
B24RV-G*** 36
B25-G****** 103
B28AMP-R*** 23
B28BMP-R*** 23
B28WA-R***P 72
B28WA-R***U 79
B28W-R***P 72
B28W-R***U 79
B2C-G*** 44
B2CI-G*** 60
B2CM31MPG*** 19
B2CM31MPR*** 19
B2CM-G*** 66
B2CMP-G*** 18
B2CMP-R*** 18
B2CM-R*** 66
B2E-G*** 44
B2EI-G*** 60

B2F-G*** 44
B2FI-G*** 60
B2FMP-14-G*** 19
B2FP-G*** 66
B2KM-G*** 66
B2KMP-G*** 19
B2KMP-R*** 19
B2KM-R*** 66
B2KS-G***P 65
B2KS-G***U 75
B2KS-R***P 65
B2KS-R***U 75
B2P-G*** 44
B2S-G***P 65
B2S-G***U 75
B2S-R***P 65
B2S-R***U 75
B2SXL12-R*** 67
B2SXL18-R*** 67
B2SXL24-R*** 67
B2SXL36-R*** 67
B2T-G*** 66
B2WCL-G***P 65
B2WCL-G***U 75
B2WCL-R***P 65
B2WCL-R***U 75
B2WK-G***P 65
B2WK-G***U 75
B2WK-R***P 65
B2WK-R***U 75
B2WUL-R***P 72
B2WUL-R***U 79
B2WUMP-R*** 23
B3114MP-G*** 21
B3114MP-R*** 21
B3115F-G*** 45
B31M-G*** 71
B31M-R*** 71
B31RMP-G****** 11
B31TP-G*** 45
B31TT-G*** 45
B31W-G***P 70
B31W-G***U 78
B31WMP-G*** 11
B31WMP-R*** 11
B31W-R***P 70
B31W-R***U 78
B3214MP-G*** 22
B3214MP-R*** 22
B32W-G***P 71
B32W-G***U 78
B32W-R***P 71
B32W-R***U 78
B38SL-G*** 80
B38SL-R*** 80
B38W-G*** 80
B38W-R*** 80
B45ABFD150 220
B45AB-R*** 219
B45AB-RK 219
B45BC-R*** 219
B45BY-R*** 217
B45BY-RK*** 217
B45BY-SK*** 217
B45BY-SKV*** 217
B45BY-TB*** 217
B45CC-R*** 219
B45MP-R*** 215
B45MP-R***V 215
B45MP-RK*** 215
B46MP-R*** 215
B46MP-R***V 215
B46MP-RK*** 215
B46MP-RKV*** 215
B5101E***BB-A 199
B5101E***BB-B 200
B5101E***BB-C 201
B5101E***BB-D 202
B5101E***CC-A 199
B5101E***CC-B 200
B5101E***CC-C 201
B5101E***CC-D 202
B5101-RKE*** 203
B5101-RKS*** 203
B5101-RKV*** 203
B5101S***BB-A 199
B5101S***BB-B 200
B5101S***BB-C 201
B5101S***BB-D 202
B5101S***CC-A 199
B5101S***CC-B 200
B5101S***CC-C 201
B5101S***CC-D 202
B5101V***BB-A 199
B5101V***BB-B 200
B5101V***BB-C 201
B5101V***BB-D 202
B5101V***CC-A 199
B5101V***CC-B 200
B5101V***CC-C 201
B5101V***CC-D 202
B5102E***-A 204
B5102-RKE*** 205
B5102-RKS*** 205
B5102-RKV*** 205
B5102S***-A 204
B5102V***-A 204
B5104E***BB-D 208
B5104E***CC-D 207
B5104-RKE*** 209
B5104-RKS*** 209
B5104-RKV*** 209
B5104S***BB-D 208
B5104S***CC-D 207
B5104V***BB-D 208
B5104V***CC-D 207
B5115S***BB-C 210
B5115S***CC-C 210
B5115-RKS*** 210
B5121E***LL-* 213
B5121E***WW-* 213
B5416MP-A*** 110
B54BMP-R*** 110
B54BMP-SK*** 110
B54G-P*** 110
B7MMW-G*** 69
B7MP-G*** 20
B7MP-R*** 20
B7MPS-G*** 20
B7MPS-R*** 20
B7RMP-G*** 20
B7RMP-R*** 20
B7RMPS-**** 20
B7RWWW-G***P 68
B7RWWW-G***U 77
B7RWWW-R***P 68
B7RWWWR***U 77
B7W-G***P 68
B7W-G***U 77
B7WMM-G*** 69
B7W-R***P 68
B7W-R***U 77
B7WWM-G*** 69
B7WWM-R*** 69
B7WWW-G***P 68
B7WWW-G***U 77
B7WWW-R***P 68
B7WWW-R***U 77
B9MP-G*** 23
B9MP-R*** 23
B9WWWW-G***P 72
B9WWWW-R***P 72
BARVE3*-G150 222

BARVE-G*** 221
BARV-G*** 221
BCC-*** 23
BCW-*** 73,79
BF30*-***-*** 116
BF302*-***-*** 116
BHC-**-* 177
BNS** 136
BS-01-R*** 113
BS-02-R***-*** 99
BS-09-U***-*** 113,115
BS100-***-*** 116
BS1002-***-*** 116
BS-1418-R***-*** 113,115
BS-1425-R***-*** 113,115
BS-16-R*** 113
BS20-***-*** 116
BS202-***-*** 116
BS-2418-R***-*** 113,115
BS-2425-R***-*** 113,115
BS-26-R*** 113
BS-31-R***-*** 115
BS-32-R***-*** 115
BS-35-R***-*** 115
BS-36-R***-*** 115
BS40-***-*** 116
BS402-***-*** 116
BS60-***-*** 116
BS602-***-*** 116
BS80-***-*** 116
BS802-***-*** 116
BSCC**-R*** 112,114
BSVACV-N*** 223
BSVA-NRKS*** 224
BSVICV-N*** 225
BSVI-NRK*** 226
BSVW**-G*** 227
BSVWNS-G*** 227
BSVW-RK* 228
BTG-G50 229
BV-23-HA*** 182
BV2BV-***11-A 193
BV2C*-***CC-A 183
BV-2C-*K*** 183
BV-2G-GK*** 188
BV2GG-***CC-A 188
BV2HG-***11-A 189
BV2IG-***11-A 191
BV2IG-***33-A 191
BV3BVLR-***1-A 194
BV3BVTR-***1-A 194
BV3IGLF-***1-A 192
BV3IGTF-***1-A 192
BV-3S*FRK*** 167,168
BV3S*LF***C-A 186
BV3S*LR***C-A 186
BV-3S*RK*** 186,187
BV3S*TF***C-A 186
BV3S*TR***C-A 186
BV4S*LF***C-A 187
BV4S*LR***C-A 187
BV4S*TF***C-A 187
BV4S*TR***C-A 187
BWSG 136
BWSG-W 136
CBSR*** 156
CILR*** 156
CSSR*** 156
CTER*** 156
D*F* 164
D*F*-S 164
D*M* 165
D*M*-S 165
D*S*-S 166
D-4HF4-S-F** 173
DCSET-*-** 132
DFC-* 132
D-H4F4-S 173
D-H4F4-SS 173
DIN-SMS**/***SP 83
DN-* 132
DRC-* 132
DT-*** 109
F16G-**** 156
F24G-**** 156
F32G-**** 156
F48G-**** 156
F64G-**** 156
G***-A-AL 146
G***-A-SS 146
G***-B-AL 147
G***-B-SS 147
G***-C-AL 147
G***-C-SS 147
G***-D-AL 147
G***-DC-AL 148
G***-DC-SS 148
G***-DP-AL 147
G***-DP-SS 147
G***-D-SS 147
G***-E-AL 146
G***-E-SS 146
G***-F-AL 146
G***-F-SS 146
G***HRP 148
G***HRPSS 148
GC*** 128
GL*** 128
GLP*** 129
GLS*** 129
H*F*-B 173
H*F*-S 173
H*F*-SS 173
HSS*** 159
HT*F* 176
HT*F*-SS 176
ICL**** 161
IXAN** 155
IXFDPLG*** 154
IXFS** 155
IXMS** 155
IXPE32-3A 154
IXSE** 155
IXSE**-3A 154
L14AJP-G*** 51
L14AJP-R*** 51
L14AM7-G*** 11
L14AM7-R*** 11
L14AM7V-R*** 34
L14AM7X-R*** 34
L15AJP-G*** 51
L15AJP-R*** 51
LCTS* 139
LUAS-08 138
LUCP-14 138
LUPG-08 138
LUPO-16 138
MAH** 159
NG** 80
RC***BT 145
RC***SE 145
RE***BT 145
RE***SE 145
RJT-***SP 84
RKHN881 157
RN** 157
RST** 157
SJBS***BB-** 125
SJBS***CC-** 125
SJSS***BB-** 140,141
SJSS***CC-** 140,141
SPOOL*-G*** 22
SPOOL*-R*** 22

SRH360CMP-G150 134
SRH360CMP-R150 134
SRH360NPT-G075 134
SRH360NPT-R150 134
SSBV*** 190
ST*F*-SS 177
STBC*** 160
STC** 157
STC-180B-R*** 135
STC-180T-R*** 135
STC-360-R*** 135
STC-RK*** 135
SWDS 136
SWDSHOSE** 136
T14VB-***PL 97
T16AMP-***PL 96
T16AMP-***PM 96
T16W-***PL 96
T16W-***PM 96
T2CM-***PL 87
T2CM-***PM 87
T2CMP-***PL 87
T2CMP-***PM 87
T2KM-***PL 88
T2KM-***PM 88
T2KMP-***PL 88
T2KMP-***PM 88
T2KS-***PL 87
T2KS-***PM 87
T2S-***PL 87
T2S-***PM 87
T2S88-***PL 88
T2S88-***PM 88
T2S92-***PL 88
T2S92-***PM 88
T21MP-***PL 97
T22MP-***PL 97
T3114MP******PL 94
T3114MP******PM 94
T31M-******PL 93
T31M-******PM 93
T31W-******PL 93
T31W-******PM 93
T3214MP******PL 95
T3214MP******PM 95
T32M-******PL 95
T32M-******PM 95
T32W-******PL 94
T32W-******PM 94
T7IMPS-******PL 92
T7IMPS-******PM 92
T7IWWMS******PL 92
T7IWWMS******PM 92
T7MP-***PL 90
T7MP-***PM 90
T7MPS-***PL 91
T7MPS-***PM 91
T7RMP-******PL 90
T7RMP-******PM 90
T7RMPS-******PL 92
T7RMPS-******PM 92
T7RWWMS******PL 91
T7RWWMS******PM 91
T7RWWW-******PL 89
T7RWWW-******PM 89
T7WWM-***PL 89
T7WWM-***PM 89
T7WWMS-***PL 91
T7WWMS-***PM 91
T7WWW-***PL 89
T7WWW-***PM 89
TL14AM7-***PL 12
TL14AM7-***PM 96
TTA** 139
TTB** 139
V*F*-B 179
V*F*-B-E 179
V*F*-SS 179
V*F*-SS-E 179
WDS1 137
WDSR 137

LIMITED WARRANTY

Dixon Sanitary, a division of Dixon Valve and Coupling Company, (herein called Dixon Sanitary) warrants the products described herein, and manufactured by Dixon Sanitary to be free from defects in material and workmanship for a period of one (1) year from date of shipment by Dixon Sanitary under normal use and service. It's sole obligation under this warranty being limited to repairing or replacing, as hereinafter provided, at its option any product found to Dixon Sanitary's satisfaction to be defective upon examination by it, provided that such product shall be returned for inspection to Dixon Sanitary within three (3) months after discovery of the defect. The repair or replacement of defective products will be made without charge for parts or labor. This warranty shall not apply to: (a) parts or products not manufactured exclusively for Dixon Sanitary, the warranty of such items being limited to the actual warranty extended to Dixon Sanitary by its supplier; (b) any product that has been subject to abuse, negligence, accident, or misapplication; (c) any product altered or repaired by others than Dixon Sanitary; and (d) to normal maintenance services and the replacement of service items (such as gaskets and seats) made in connection with such services. To the extent permitted by State law, this limited warranty shall extend only to the buyer and any other person reasonably expected to use or consume the goods who is injured in person by any breach of the warranty. No action may be brought against Dixon Sanitary for an alleged breach of warranty unless such action is instituted within one (1) year from the date the cause of action accrues. This limited warranty shall be construed and enforced to the fullest extent allowable by applicable State law.

Other than the obligation of Dixon Sanitary set forth herein, Dixon Sanitary disclaims all warranties, express or implied, including but not limited to any implied warranties of merchantability or fitness for a particular purpose, and any other obligation or liability. The foregoing constitutes Dixon Sanitary's sole obligation with respect to damages, whether direct, incidental or consequential, resulting from the use or performance of the product.

Some products and sizes may be discontinued when stock is depleted, or may require a minimum quantity for ordering.

NOTE: Reasonable care has been taken in preparing this catalog. Dixon Sanitary, a division of Dixon Valve & Coupling Company, reserves the right to make corrections and any dimensional changes.

Beverage

Dairy

Oils

Water

Vinegar

Cosmetics

CIP Solutions

Dixon Sanitary now offers the Bradford™ BC-Series Sanitary Centrifugal Pumps.

- Pump and all spare parts are completely interchangeable with all Sanitary C-Series pumps
- Pump model and component part numbers are familiar and easy to use - BC114, BC216, etc.
- Most complete pumps ship in 24 hours
- Stocked repair kits: #1, #2, #3, DG and #4 (all-in-one)

Model	Inlet	Outlet	Maximum Impeller
BC114	1½" or 2"	1½"	4"
BC216	2" or 2½"	1½"	6"
BC218	2" or 3"	1½"	8"
BC328	3" or 4"	2"	8"

go to *bradfordfittings.com* to download
the pump brochure, engineering manual and repair kit
for more information see the Engineered Products catalog

Scan me with your Smart Phone.
No reader?
Download a free QR-Code 2D barcode reader.
http://www.mobile-barcodes.com/qr-code-software/

Mechanical Specifications

Standard Construction

- Volute: 316L stainless steel
- Impeller: CF8M (316) stainless steel
- Backplate: 316L stainless steel
- Stub Shaft: 316L stainless steel
- Adapter: 304 stainless steel
- Optional Leg Kit: 304 stainless steel
- Seal Types: externally balanced 'D' & 'DG' with clamped in seat and 'F'
- Rotary Seal Material: carbon and silicone carbide
- DG Seal Seat Material: silicon carbide, ceramic and tungsten carbide
- Elastomers: Buna, EPDM, silicone and Viton®
- Finish: sanitary polish 32Ra

Performance Characteristics

- Nominal Capacity: up to 780 GPM
- Temperature: 32°F to 212°F, consult factory for other temperatures
- Nominal speed: up to 3500 RPM - 60 Hz

Motors and Mounting

- Motor: standard C-face, 1750 & 3450 RPM, TEFC and washdown, foot mounted
- Additional motor types available upon request
- Mounting: pump head mounted to a C-Face motor

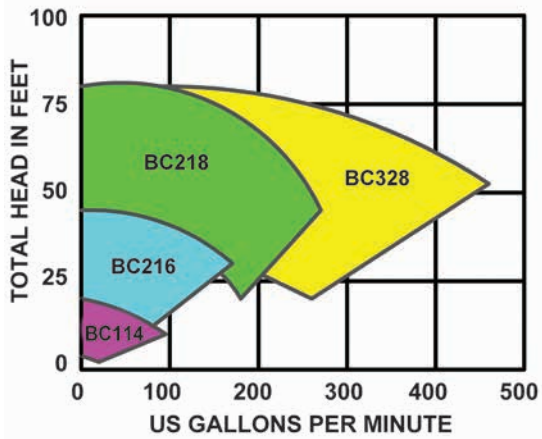

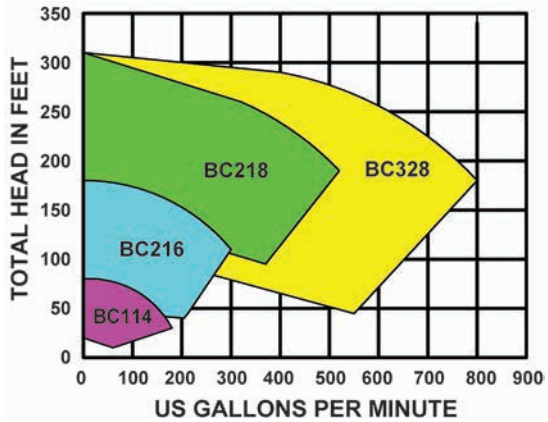

phone: 800.789.1718
fax: 800.789.4046
email: pumps@bradfordfittings.com

A Clamp Fittings pages 7-31
B Pipe Fittings pages 32-37
C Bevel Seat pages 38-48
D John Perry pages 49-53
E I-Line / Q-Line pages 54-63
F Polished Fittings pages 64-73
G Unpolished Fittings pages 74-80
H European Fittings pages 81-85
I BPE Fittings pages 86-100
J Tubing & Wall Flanges pages 101-103
K Tube Hangers pages 104-108
L Custom Fabrications pages 109
M Sight Glasses pages 110
N Filters / Strainers pages 111-117
O Instrumentation pages 118-133
P Clean, Washdown& Main. pages 134-139
Q Swivels pages 140-141
R Cam & Groove pages 142-152
S Hose Fittings pages 153-161
T Air Fittings pages 162-170
U High Press. Quick Disc. pages 171-179
V Ball Valves pages 180-196
W Butterfly Valves pages 197-213
X Check Valves pages 214-222
Y Samples Valves pages 223-229
Z Technical Information pages 230-259

bradfordfittings.com

Customer Service:
800.789.1718

DIXON

The Right Connection™

Dixon Sanitary
N25 W23040 Paul Road
Pewaukee, WI 53072
Customer Service: 800.789.1718
Fax: 800.789.4046

Stay connected with Dixon on:

YouTube

dixonvalve.com

customer service

© 2013

DS20131P10M

Printed in the USA